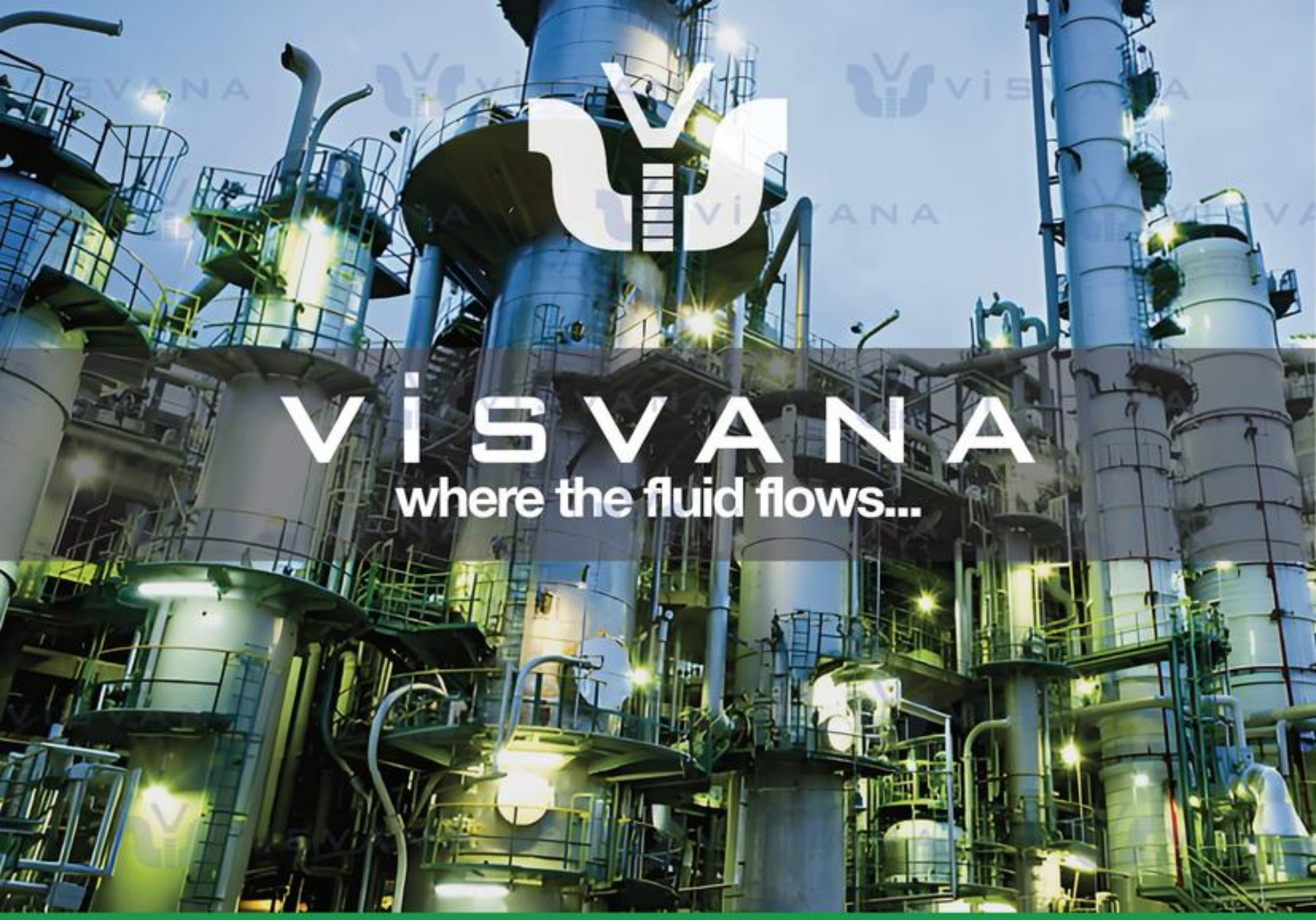

Industrial Valves - Endüstriyel Vanalar

Product Catalogue Ürün Kataloğu

DIN VALVES

ASME VALVES

BS VALVES

About Us
Hakkımızda

Vis Vana has wide range of valves such as gate valve, globe valve, check valve, ball valve, butterfly valve, strainer, hydrant, joints, coupling and specially modified valves.

VİS VANA, established in Istanbul, manufactured our first valves in 1983 and Vis Vana was quickly recognized as a leader in many kind of valve markets by dedication to quality, customer satisfaction and FLEXIBLE PRODUCTION. Now, Vis Vana manufactures and exports wide range of valves which are used in many industrial branches in its facilities by using top grade materials, incorporate technologically advanced machining processes.

All of valves are manufactured according to international standards such as DIN, ANSI, JIS, BS etc. In addition, pressure range is between PN6 to PN320 or Class150 to Class 2500 and size range is from DN15 to DN2000 or ½" to 80". Therefore, our production covers wide range of industries and applications in the whole world.

VİS VANA ; sürgülü vana, buhar vanası, çek valf, küresel vana, kelebek vana, pislik tutucu, hidrant, demontaj parçası, kaplin ve özel üretim vanalar ve bunun gibi vanalardan oluşan geniş ürün yelpazesine sahiptir.

İstanbul'da kurulan Vis Vana, ilk vana üretimini 1983'te gerçekleştirdi ve vana sektöründe kalite, müşteri memnuniyeti ve esnek üretimi sayesinde çabucak lider ve bilinen bir marka haline geldi.Vis Vana bir çok sanayi dalında kullanılan vanalardan oluşan geniş yelpazedeki ürünleri; kendi tesislerinde, ileri düzeyde işleme teknolojisi kullanarak, yüksek kaliteli malzemelerden üretir ve ihraç eder.

Bütün vanalar DIN, ANSI, JIS, BS gibi uluslararası standartlara göre üretilir. Buna ek olarak; PN6'dan, PN320'ye; Class 150'den, Class2500'e; DN15'ten, DN2000'e; ½"'den, 80"'e kadar basınç ve boyutlarda üretim yapan Vis Vana, tüm dünyadaki sanayilere ve uygulamalarına destek verir.

İlker Çetin
General Manager

Sürgülü Vanalar
Gate Valves

Glob Vanalar
Globe Valves

Çekvalfler
Check Valves

Kelebek Vanalar, Vantuzlar, Demontajlar, Flanş Adaptörleri
Butterfly Valves, Air Release Valves, Dismantling Joints

Pislik Tutucular, Dip Klapeleri, Basket Filtre
Strainers, Foot Valves, Basket Filter

Küresel Vanalar
Ball Valves

Şamandıralı Vanalar, Basınç Düşürücüler
Float Valves, Pressure Reducing Valves

Emniyet Vent., Kondenstoplar, İğne Vana, Kazan Blöf Vanaları, Blöf (Plug) Vanalar
Safety Valves, Steam Traps, Needle Valves, Tank Valves, Plug Valve

Yangın Hidrantları, Sulama Hidrantları
Fire Hydrants, Irrigation Hydrants

Diyaframlı Vana, Pinç Vana, Akış Göstergeleri
Diaphragm Valve, Pinch Valve, Sight Glass

ANSI Sürgülü, Buhar, Çek, Küresel, Blöf, Kelebek Vanalar
ANSI Gate, Globe, Check, Ball, Plug, Butterfly Valves

General Information
Genel bilgiler

Vis Vana which has ISO 9001, ISO 14001, ISO 45001 and CE certificate, has 9800 square meter total area and 5400 square meter manufacturing facilities where technologically advanced machining processes located.

ISO 9001, ISO 14001, ISO 45001 ve CE sertifikasına sahip olan Vis vana, İleri teknoloji üretimini, 5400m² kapalı olmak üzere 9800m² toplam alanda gerçekleştirmektedir.

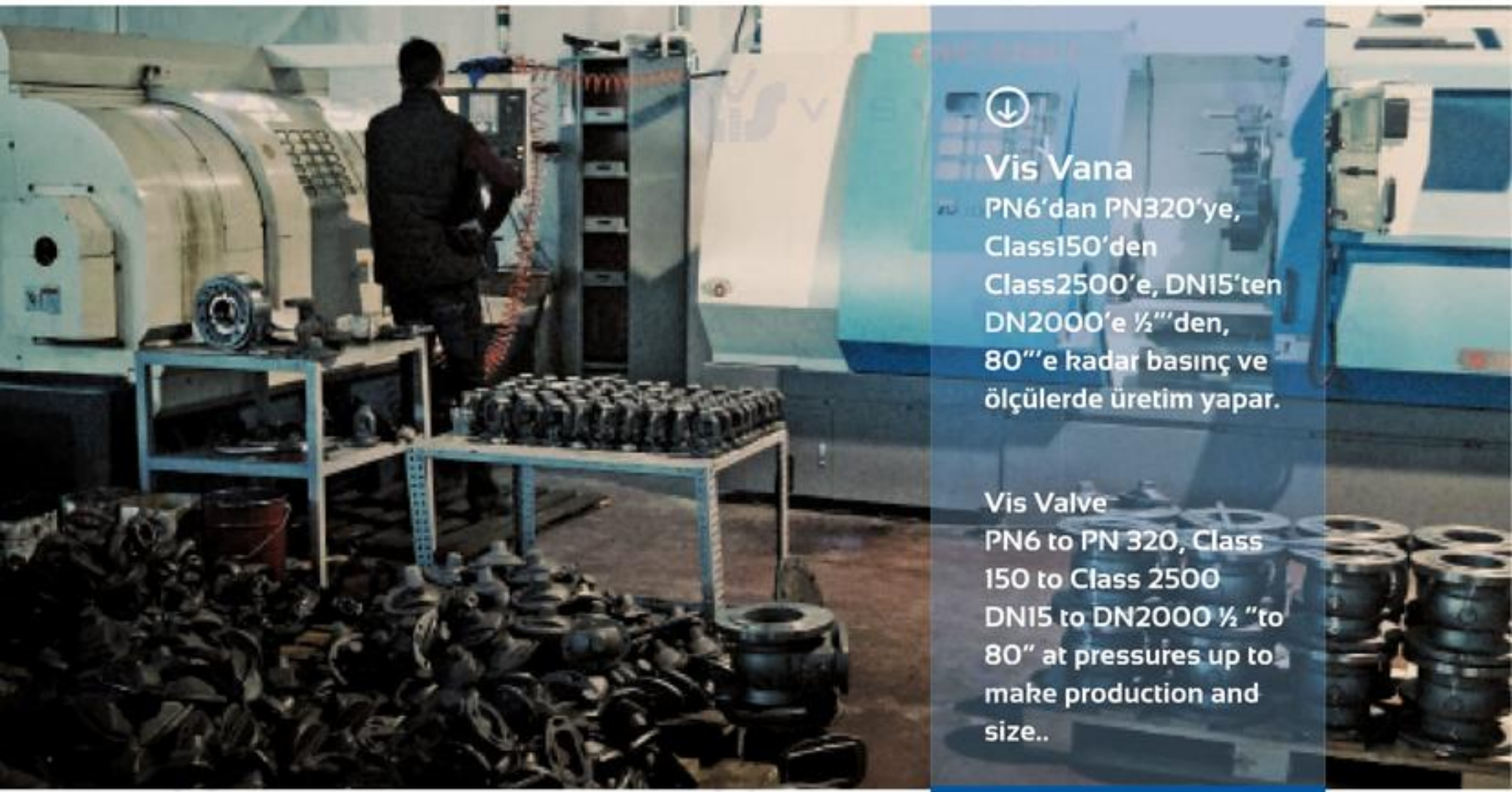

Vis Vana
PN6'dan PN320'ye, Class150'den Class2500'e, DN15'ten DN2000'e ½"'den, 80"'e kadar basınç ve ölçülerde üretim yapar.

Vis Valve
PN6 to PN 320, Class 150 to Class 2500 DN15 to DN2000 ½ "to 80" at pressures up to make production and size..

Machining,

assemblying, testing and approvals are performed in our facilities and casting is performed by in facility and outsource which are approved by Bureau Veritas, Lloyds Register, DNV, GL. Beside this, as request of the customers these 3rd party inspection companies inspect the test pressure in the facility.

Finally, due to having excellent service to our customers, Vis Valve exports the goods to more than 60 countries that's why, this makes stronger and more careful to develop theirselves.
As a result; Vis Vana family believes that Vis Vana offers most efficient commercial package to the valve markets.

Due to obtaining positive synergy with our personel, Vis Valve will always be strong and active to serve our customers.

Vis Vana; işleme, montaj, test ve onayı kendi tesislerinde gerçekleştirir.

Vis Valve; machining, assemblying, testing and approvals are performed in our facilities.

Döküm işleminin bir kısmını tesislerde bir kısmını Bureau Veritas, Lloyds Register, DNV, GL gibi bağımsız kuruluşlardan onaylı anlaşmalı dokümhanelerde gerçekleştiren Vis Vana; işleme, montaj, test ve onayı kendi tesislerinde gerçekleştirir. Ayrıca bazı siparişlerde müşterinin isteği üzerine bağımsız kuruluşlar basınç testi için tesislere gelmektedir.

Son olarak; ürün kalitesi ve efektif müşteri hizmetinden dolayı, Vis Vana ürünlerini 60'dan fazla ülkeye ihraç eder. Bu durum, kendilerini geliştirmek için Vis Vana'yı daha dikkatli ve güçlü yapar.

Sonuç olarak; Vis Vana ailesi vana sektörüne en verimli ticari paketi sunduğuna inanır. Çalışanlarından edinilen pozitif sinerjiden dolayı müşterilerine hizmet ederken her zaman aktiftir, güçlüdür ve güçlü olmaya devam edecektir.

Standart ve özel vana üretimi
Manufacturing standard & special valves

Milestone / Özgeçmiş

1983
Started to manufacturing Globe Valve and Safety Valve according to DIN standards

1987
ANSI Gate Valve, Globe Valve and Check Valve production

1989
Marine Valves production and start to built 2nd facility

1992
Butterfly Valve production

1983
İlk olarak DIN standardına göre buhar vanası ve emniyet ventili üretildi.

1987
ANSI Sürgülü Vana, Buhar Vanası ve Çek Valf Üretildi.

1989
Gemi Vanaları üretimine başlandı ve ikinci tesis inşasına başlandı.

1992
Kelebek Vana üretimi

1995
Started to manufacturing in 2nd facility

1995
İstanbul'daki ikinci tesiste üretime başlandı.

1997
First export

1997
İlk ihracat.

1999
Diaphram Valves, Pinch Valve, Plug Valve production

1999
Diyaframlı Vana, Pinç Vana ve Blöf Vana üretimine başlandı.

2003
ISO 9001, CE

2003
ISO 9001, CE sertifikası alındı.

2016
API 6D, ISO 14001, ISO 45001 certificate

2016
API 6D, ISO 14001, ISO 45001 sertifikası alındı.

2020
Foundry approval from DNV-GL, BV and Lloyds Register.

2020
DNV-GL, BV ve Lloyds Register dökümhane onayı alındı.

60'dan fazla ülkeye ihracat
Exporting to more than 60 countries

2004
Vis Valve moved all facility from Eyup to Buyukcekmece facility (current site)

2004
Tüm Fabrika Eyüp'ten Büyükçekmece'ye, şu anki tesise taşındı

2006
Pattern workshop established

2006
Modelhane kuruldu

2009
Factory area enlargement

2009
Fabrika alanı genişletildi

2012
Built foundry

2012
Dökümhane kuruldu

2013
Investment on advanced technological machines

2013
İleri teknoloji makina yatırımı yapıldı

2015
American Petrolium Institute Certificate API 6D

2015
Amerikan Petrol Enstütüsü Sertifikası API 6D alındı

2022
New warehouse 3000 m²

2022
3000 m² yeni depo üretim tesisine eklendi.

Why VIS VALVE?

Due to having production ANSI, JIS and DIN valves in same facility, Vis Valve is very flexible to serve their customers not only in one kind of standart but also other standards. Also, Vis Valve has highly educated personells in sales and production departments which makes them and customers very active in valve markets. Vis Valve does not only supply standart valves but also they produce specialized valves to their customers and their consultants.

Niçin VİS VANA?

Vis Vana; aynı tesislerde , ANSI, JIS ve DIN vanaları ve diğer standarları da ürettiğinden dolayı müşteri hizmetine ürün sunmada çok esnektir. Vis Vana ayrıca satış ve üretim departmanlarında yüksek eğitimli personele sahiptir. Bu durum, onları ve de müşterilerini vana sektöründe aktifleştirir. Vis Vana standart vana yanında müşterilerine özel vanalar da tedarik eder.

Pressure Seal Swing Check Valve Class 1500(PN250)
4" and 10"

Full Lift Nozzle Type Safety Valve Class 600
Inlet 4"x Outlet 6"

Globe Valve PN320
DN65

Fully Welded Ball Valve Class 300
48"

Gate Valves

SÜRGÜLÜ VANALAR

Products & Technical Data

Teknik Bilgiler

www.visvana.com

VSV-06

GATE VALVE
SÜRGÜLÜ VANA

Design / Dizayn: EN 1171, DIN 3352
Face to Face / L Boyu: EN 558
Serie 14, DIN3202 F4
Pressure Rate / Basınç Aralığı: PN6
Size Range / Ölçü Aralığı: DN40-DN150
Temperature / Sıcaklık: -10....+120 °C
Flange Ends / Flanş: DIN EN 1092-2/B
Test: EN 12266

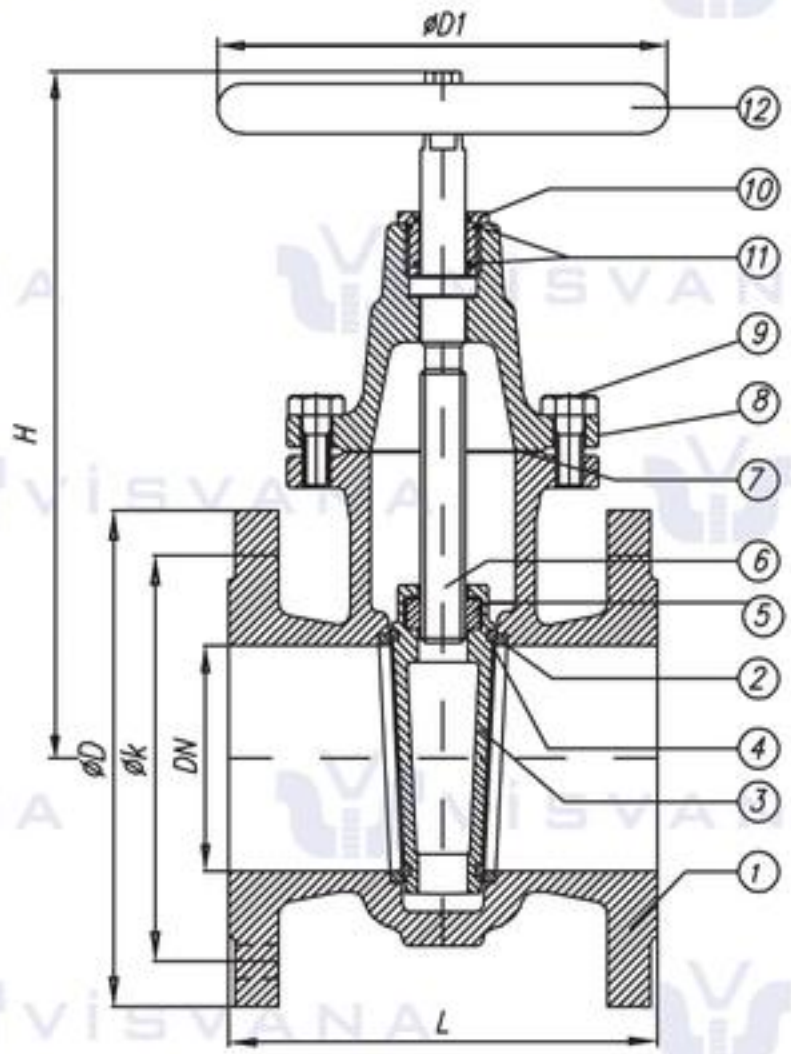

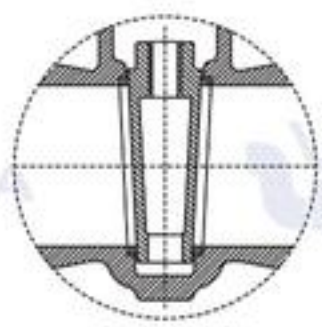

DN40...100
Wedge Type / Sürgü Tipi

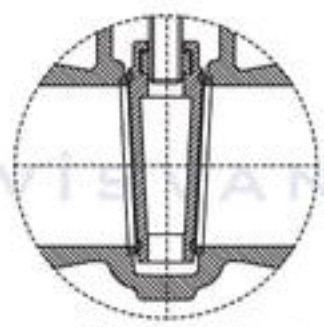

DN125...900
Wedge Type / Sürgü Tipi

NO	PART NAME	PARÇA ADI	MATERIAL / MALZEME
1	*Body*	Gövde	GG 25 / GGG-40 / GGG40.3 /GSC25 / Bronze RG5, RG7, RG10, SS304, SS316
2	*Body seat*	Gövde Burcu	Ms 58/Bronze/SS304/SS316
3	*Wedge*	Sürgü	GG 25 / GGG-40 / GGG40.3 / GSC25 / Bronze RG5, RG7, RG10, SS304, SS316
4	*Wedge seat*	Sürgü Burcu	Ms 58/Bronze /S.S/ AISI 304-316
5	*Stem nut*	Sürgü Somunu	Ms 58/Bronze /GGG 40

NO	PART NAME	PARÇA ADI	MATERIAL / MALZEME
6	*Stem*	Mil	SS420/Ms 58/Bronze/SS304/SS316
7	*Gasket*	Conta	EPDM/FRANZELİT/KLİNGERİT/PTFE
8	*Bonnet*	Kapak	GG 25 / GGG-40
9	*Bolt*	Civata	5 D / S.S
10	*Packing nut*	Mil Somunu	Ms 58/Bronze/S.S
11	*O-Ring*	O-Ring	EPDM
12	*Handwheel*	Volan	GG 20

Nominal Pressure / Anma Basıncı	PN	6						
Nominal Diameter / Anma Çapı	DN	40	50	65	80	100	125	150
Valve Dimensions / Vana Boyutları	L	140	150	170	180	190	200	210
TS EN 1171	H	157	190	210	230	260	365	375
DIN 3352/2-F4	D1	160				200	250	
Flange Dimensions / Flanş Ölçüleri	D	130	140	160	190	210	240	265
EN 1092-2 PN 6	k	100	110	130	150	170	200	225
Weight / Ağırlık (~ for iron)	kg	7	8	11.5	15	20	33	39

GATE VALVE
SÜRGÜLÜ VANA

VSV-10

Design / Dizayn: EN 1171, DIN 3352
Face to Face / L Boyu: EN 558
Serie 14, DIN3202 F4
Pressure Rate / Basınç Aralığı: Max. PN16
Size Range / Ölçü Aralığı: DN40-DN1000
Temperature / Sıcaklık: -10....+120°C
Flange Ends / Flanş: DIN EN 1092-2/B
Test: EN 12266

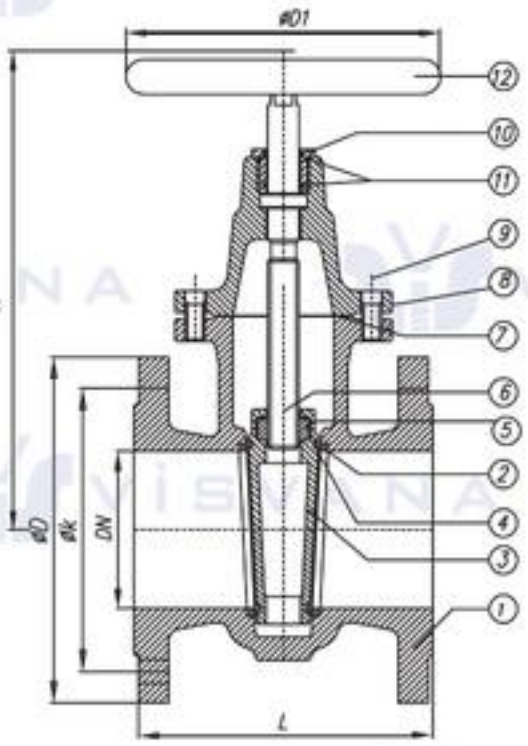

DN250 / DN300
Packing Detail
Salmastra Detayı

DN350 / DN1000
Packing Detail
Salmastra Detayı

DN40...100
Wedge Type /

DN125...900
Wedge Type /

NO	PART NAME	PARÇA ADI	MATERIAL / MALZEME
1	*Body*	Gövde	GG 25 / GGG-40 / GGG40.3 / GSC25 / Bronze RG5, RG7, RG10/ SS304, SS316
2	*Body seat*	Gövde Burcu	Ms58 / Bronze / SS304, SS316
3	*Wedge*	Sürgü	GG 25 / GGG-40 / GGG40.3 / GSC25 / Bronze RG5, RG7, RG10/ SS304, SS316
4	*Wedge seat*	Sürgü Burcu	Ms58 / Bronze / SS304, SS316
5	*Stem nut* Only 125…900	Sürgü Somunu Sadece 125…900	Bronze /GGG 40
6	*Stem*	Mil	SS420/Ms58/Som59/CuZn35Ni/ CuSn8,CuSn10/SS304,SS316

NO	PART NAME	PARÇA ADI	MATERIAL / MALZEME
7	*Gasket*	Conta	EPDM/ NBR / Klingerit / Graphite
8	*Bonnet*	Kapak	GG 25 / GGG-40 / GGG40.3 / GSC25 / Bronze RG5, RG7, RG10/ SS304, SS316
9	*Bolt*	Civata	8.8 / A2 / A4
10	*Packing nut*	Mil Somunu	Ms 58/Bronze/S.S
11	*O-Ring*	O-Ring	EPDM/ NBR
12	*Handwheel*	Volan	GG 20

Nominal Pressure / Anma Basıncı	PN	16-10							10-6			6-4			4-2,5		2,5-1,6	1,6-1	
Nominal Diameter / Anma Çapı	DN	40	50	65	80	100	125	150	200	250	300	350	400	500	600	700	800	900	1000
Valve Dimensions / Vana Boyutları	L	140	150	170	180	190	200	210	230	250	270	290	310	350	390	430	470	510	550
TS EN 1171	H	157	190	210	230	260	365	375	500	630	715	820	910	1135	1300	1480	1690	1820	2030
DIN3352/2-F4	D1	160				200	250			315		400		500		630	800		
Flange Dimensions / Flanş Ölçüleri	D	150	165	185	200	220	250	285	340	395	445	505	565	670	780	895	1015	1115	1230
EN 1092-2 PN10	k	110	125	145	160	180	210	240	295	350	400	460	515	620	725	840	950	1050	1160
Flange Dimensions / Flanş Ölçüleri	D	150	165	185	200	220	250	285	340	405	460	520	580	715	840	910	1025	1125	1255
EN 1092-2 PN16	k	110	125	145	160	180	210	240	295	355	410	470	525	650	770	840	950	1050	1170
Weight / Ağırlık (~ for iron)	kg	8	10	14	15,5	22	37	44	81	123	176	225	290	460	680	870	1200	1400	1540

VSV-16

GATE VALVE
SÜRGÜLÜ VANA

Design / Dizayn: EN 1171, DIN 3352
Face to Face / L Boyu: EN 558
Serie 15, DIN3202 F5
Pressure Rate / Basınç Aralığı: Max. PN40
Size Range / Ölçü Aralığı: DN40-DN1000
Temperature / Sıcaklık: -20....+120 °C
Flange Ends / Flanş: DIN EN 1092-2/B
Test: EN 12266

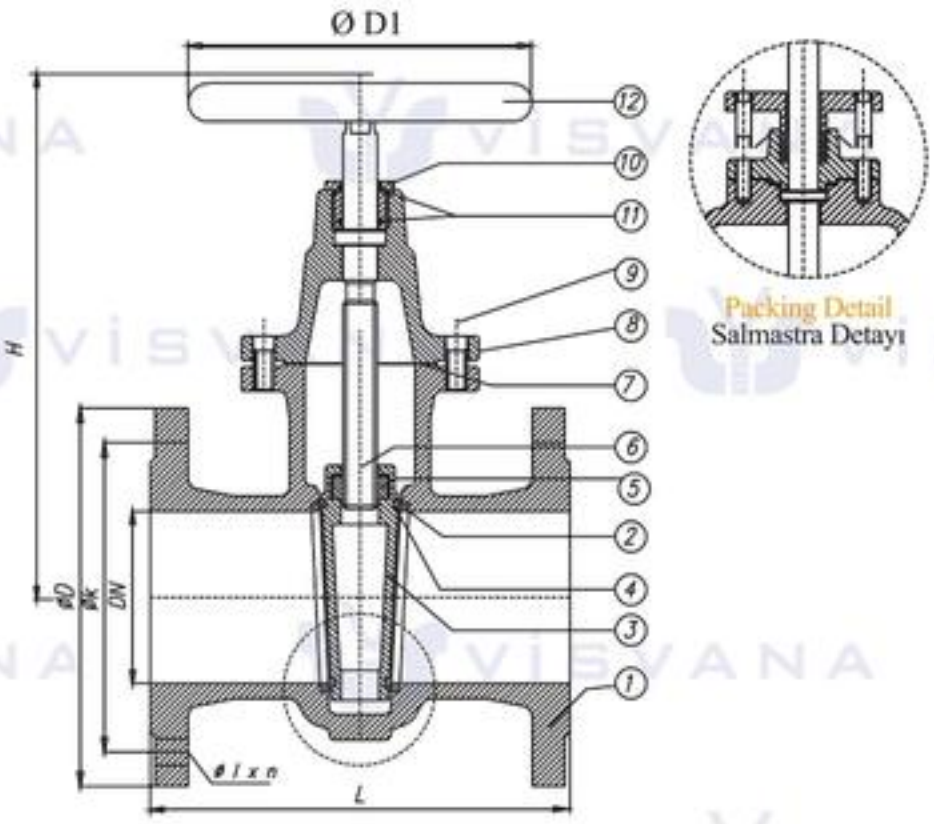

Pressure Range Basınç Aralığı	Cast Iron Pik Döküm GG25	Ductlle Iron Sfero Döküm GGG40
DN40-DN600	PN16	PN25
DN700-DN1000	PN10	PN16

NO	PART NAME	PARÇA ADI	MATERIAL / MALZEME
1	*Body*	Gövde	GG 25/GGG-40/GGG40.3/GSC25/ Bronze RG5, RG7, RG10/SS304, SS316
2	*Body seat*	Gövde Burcu	Ms58/Bronze/SS304, SS316
3	*Wedge*	Sürgü	GG 25/GGG-40/GGG40.3/GSC25/ Bronze RG5, RG7, RG10/SS304, SS316
4	*Wedge seat*	Sürgü Burcu	Ms58 / Bronze / SS304, SS316
5	*Stem nut*	Sürgü Somunu	Ms 58 / Bronze /S.S
6	*Stem*	Mil	SS420/Ms58/Som59/CuZn35Ni/ CuSn8,CuSn10/SS304,SS316

NO	PART NAME	PARÇA ADI	MATERIAL / MALZEME
7	*Gasket*	Conta	EPDM / NBR / Klingerit / Graphite
8	*Bonnet*	Kapak	GG 25/GGG-40/GGG40.3/GSC25/ Bronze RG5, RG7, RG10/SS304, SS316
9	*Bolt*	Civata	8.8 / A2 / A4
10	*Packing nut*	Mil Somunu	Ms 58/Bronze/S.S
11	*O-Ring*	O-Ring	EPDM
12	*Packing*	Salmastra	Graphite
13	*Handwheel*	Volan	GG 20

Nominal Pressure / Anma Basıncı	PN	PN 10 / 16 / 25 / 40																	
Nominal Diameter / Anma Çapı	DN	40	50	65	80	100	125	150	200	250	300	350	400	500	600	700	800	900	1000
Valve Dimensions / Vana Boyutları	L	240	250	270	280	300	325	350	400	450	500	550	600	700	800	900	1000	1100	1200
EN 1171	H	215	220	265	300	320	370	415	590	675	750	870	950	1200	1330	1530	1690	1925	2160
DIN3352/2-F5	D1	200		250			315		400		500		620	800					
Flange Dimensions / Flanş Ölçüleri	D	150	165	185	200	220	250	285	340	395	445	505	565	670	780	895	1015	1115	1230
EN 1092-2 PN10	k	110	125	145	160	180	210	240	295	350	400	460	515	620	725	840	950	1050	1160
	Ølxn	Ø19x4			Ø19x8			Ø23x8		Ø23x12		Ø23x16	Ø31x16	Ø34x20	Ø37x20	Ø37x24	Ø41x24	Ø41x28	Ø44x28
Flange Dimensions / Flanş Ölçüleri	D	150	165	185	200	220	250	285	340	400	455	520	580	715	840	910	1025	1125	1255
EN 1092-2 PN16	k	110	125	145	160	180	210	240	295	355	410	470	525	650	770	840	950	1050	1170
	Ølxn	Ø18x4			Ø18x8			Ø22x8	Ø22x12	Ø26x12		Ø26x16	Ø30x16	Ø22x16	Ø33x20	Ø36x20	Ø36x24	Ø39x24	Ø42x28
Flange Dimensions / Flanş Ölçüleri	D	150	165	185	200	235	270	300	360	425	485	555	620	730	845	960	1085	1185	1320
EN 1092-2 PN25	k	110	125	145	160	190	220	250	310	370	430	490	550	660	770	875	990	1090	1210
	Ølxn	Ø18x4		Ø18x8	Ø18x8	Ø22x8	Ø26x8	Ø26x8	Ø26x12	Ø30x12	Ø30x16	Ø33x16	Ø36x16	Ø36x20	Ø39x20	Ø42x24	Ø48x24	Ø48x28	Ø56x28
Flange Dimensions / Flanş Ölçüleri	D	150	165	185	200	235	270	300	375	450	515	580	660	755	890	995	1140	1250	1360
EN 1092-2 PN40	k	110	125	145	160	190	220	250	320	385	450	510	585	670	795	900	1030	1140	1250
	Ølxn	Ø18x4		Ø18x8	Ø18x8	Ø22x8	Ø26x8	Ø26x8	Ø30x12	Ø33x12	Ø33x16	Ø36x16	Ø39x16	Ø42x20	Ø48x20	Ø48x24	Ø56x24	Ø56x28	Ø56x28
Weight / Ağırlık (~ for iron)	kg	13	15	22	27	36	47	59	141	195	285	371	460	751	1143	1330	2300	3400	4300

GATE VALVE with indicator
SEVİYE GÖSTERGELİ SÜRGÜLÜ VANA

VSG-10

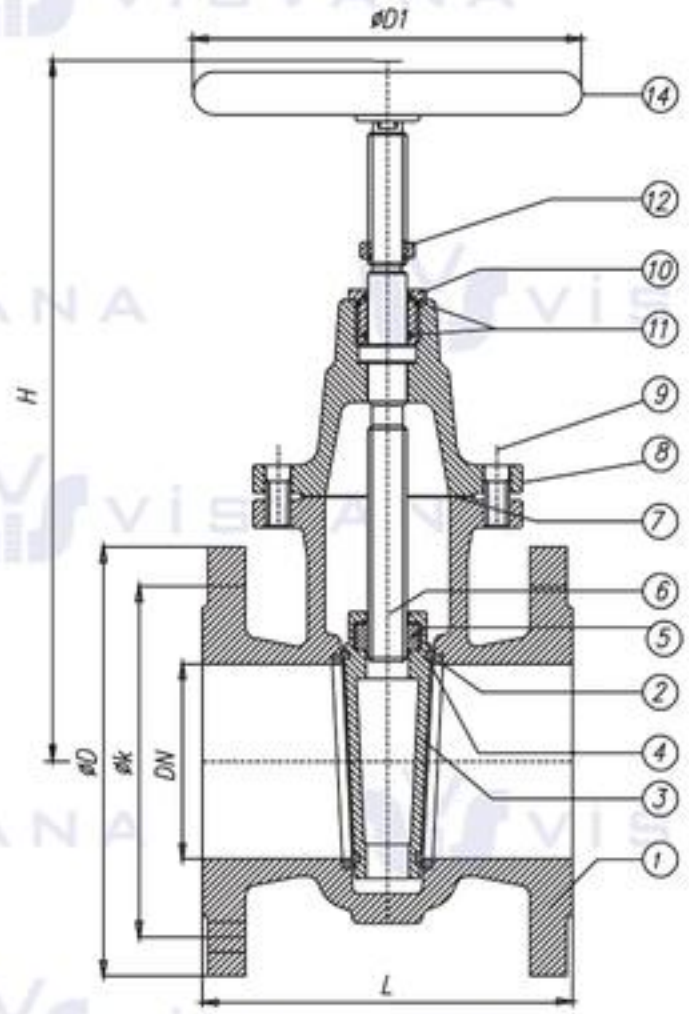

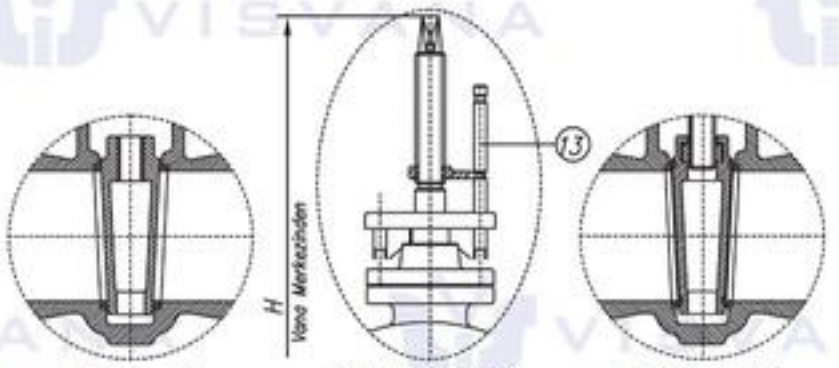

DN40...100 Wedge Type / Sürgü Tipi — Seviye Göstergesi Indicator — DN125...900 Wedge Type / Sürgü Tipi

Design / Dizayn: EN 1171, DIN 3352
Face to Face / L Boyu: EN 558
Serie 14, DIN3202 F4
Pressure Rate / Basınç Aralığı: Max. PN16
Size Range / Ölçü Aralığı: DN40-DN1000
Temperature / Sıcaklık: -10....+120 °C
Flange Ends / Flanş: DIN EN 1092-2/B
Test: EN 12266

NO	PART NAME	PARÇA ADI	MATERIAL / MALZEME
1	*Body*	Gövde	GG 25 / GGG-40 / GGG40.3 / GSC25 / Bronze RG5, RG7, RG10/ SS304, SS316
2	*Body seat*	Gövde Burcu	Bronze / SS304, SS316
3	*Wedge*	Sürgü	GG 25 / GGG-40 / GGG40.3 / GSC25 / Bronze RG5, RG7, RG10/ SS304, SS316
4	*Wedge seat*	Sürgü Burcu	Bronze / SS304, SS316
5	*Stem nut* Only 125...900	Sürgü Somunu Sadece 125...900	Ms58/Bronze /GGG 40
6	*Stem*	Mil	Ms58/Som59/CuZn35Ni/CuSn8, CuSn10/SS420,SS304,SS316

NO	PART NAME	PARÇA ADI	MATERIAL / MALZEME
7	*Gasket*	Conta	EPDM/ NBR / Klingerit / Graphite
8	*Bonnet*	Kapak	GG 25 / GGG-40 / GGG40.3 / GSC25 / Bronze RG5, RG7, RG10/ SS304, SS316
9	*Bolt*	Civata	8.8 / A2 / A4
10	*Packing nut*	Mil Somunu	Ms 58/Bronze/S.S
11	*O-Ring*	O-Ring	EPDM
12	*Indicator*	Gösterge	Ms 58/ SS420, SS304, SS316
13	*Indicator Pin*	Gösterge Pimi	Ms 58/ SS420, SS304, SS316
14	*Handwheel*	Volan	GG 20

Nominal Pressure / Anma Basıncı	PN	16-10							10-6			6-4			4-2,5		2,5-1,6	1,6-1	
Nominal Diameter / Anma Çapı	DN	40	50	65	80	100	125	150	200	250	300	350	400	500	600	700	800	900	1000
Valve Dimensions / Vana Boyutları DIN EN 1171	L	140	150	170	180	190	200	210	230	250	270	290	310	350	390	430	470	510	550
	H	190	235	260	290	310	435	455	580	720	815	925	1030	1265	1450	1650	1860	1990	2030
	D1	160				200		250		315		400		500		630	800		
Flange Dimensions / Flanş Ölçüleri EN 1092-2 PN10	D	150	165	185	200	220	250	285	340	395	445	505	565	670	780	895	1015	1115	1230
	k	110	125	145	160	180	210	240	295	350	400	460	515	620	725	840	950	1050	1060
Flange Dimensions / Flanş Ölçüleri EN 1092-2 PN16	D	150	165	185	200	220	250	285	340	405	460	420	580	715	840	910	1025	1125	1255
	k	110	125	145	160	180	210	240	295	355	410	470	525	650	770	840	950	1050	1170
Weight / Ağırlık (~ for iron)	kg	8.5	10	11	18	22.5	37.5	45	82	125	178	228	293	465	685	875	1205	1405	1540

VSG-16

GATE VALVE with stuf. box and indicator

SEVİYE GÖSTERGELİ SÜRGÜLÜ VANA (Baskı Yuvalı)

Design / Dizayn: EN 1171, DIN 3352
Face to Face / L Boyu: EN 558
Serie 14, DIN3202 F4
Pressure Rate / Basınç Aralığı: Max. PN16
Size Range / Ölçü Aralığı: DN40-DN600
Temperature / Sıcaklık: -10....+120 °C
Flange Ends / Flanş: DIN EN 1171
Test: EN 12266

Options : Double threaded stem, drain plug, electrical actuator, pneumatic actuator, lineer or multiturn hydraulic actuator, ISO top flange for actuator mounting
Flange options: ANSI, JIS

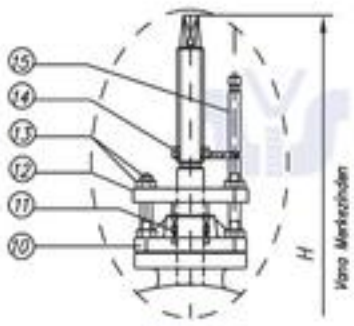

Indicator
Seviye Göstergesi

DN 40...600
Packing Detail
Salmastra Detayı

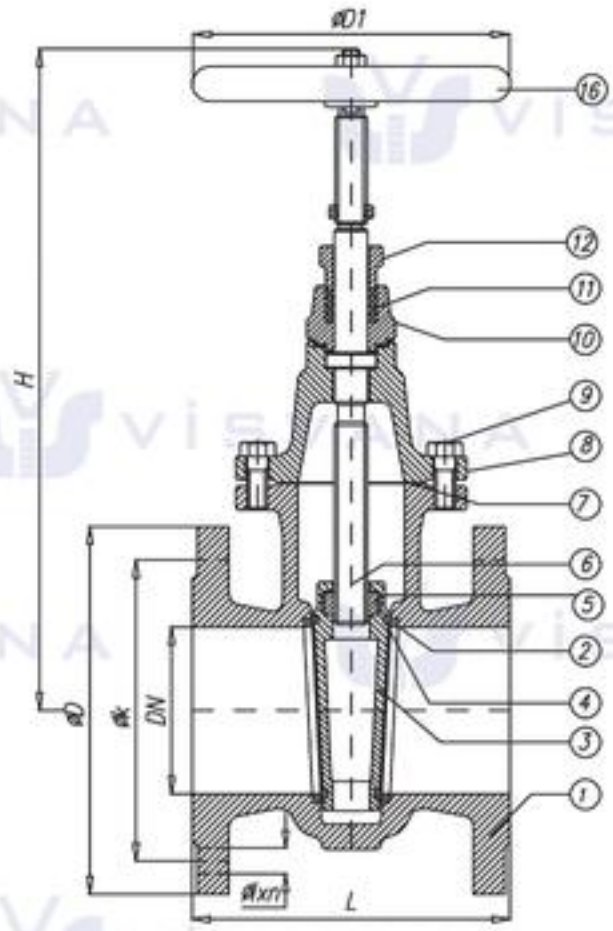

NO	PART NAME	PARÇA ADI	MATERIAL / MALZEME
1	*Body*	Gövde	GG 25 / GGG-40 / GGG40.3 / GSC25 / Bronze RG5, RG7, RG10/ SS304, SS316
2	*Body seat*	Gövde Burcu	Bronze RG5/ SS304, SS316
3	*Wedge*	Sürgü	GG 25 / GGG-40 / GGG40.3 / GSC25 / Bronze RG5, RG7, RG10/ SS304, SS316
4	*Wedge seat*	Sürgü Burcu	Bronze RG5 / SS304, SS316
5	*Stem nut*	Sürgü Somunu	Ms58 / Bronze / SS
6	*Stem*	Mil	Ms58/Som59/CuZn35Ni/CuSn8, CuSn10/SS420,SS304,SS316
7	*Gasket*	Conta	EPDM / Klingerit / Graphite
8	*Bonnet*	Kapak	GG 25 / GGG-40 / GGG40.3 / GSC25 / Bronze RG5, RG7, RG10/ SS304, SS316

NO	PART NAME	PARÇA ADI	MATERIAL / MALZEME
9	*Bolt*	Civata	8.8 / A2 / A4
10	*Stuffing Box*	Salmastra Yuvası	GG 25 / GGG-40 / GGG40.3 / GSC25 / Bronze RG5, RG7, RG10/ SS304, SS316
11	*Packing*	Salmastra	Graphite / Teflon
12	*Gland*	Baskı	GG 25 / GGG-40 / GGG40.3 / GSC25 / Bronze RG5, RG7, RG10/ SS304, SS316
13	*Stud, Nut*	Saplama, Somun	Steel / A2 / A4
14	*Indicator*	Gösterge	CuSn5ZnPb5-C(Rg-5)
15	*Indicator Pin*	Gösterge Pimi	Ms 58 / SS420,SS304,SS316
16	*Handwheel*	Volan	GG 25

Nominal Pressure / Anma Basıncı	PN	16-10							10-6			6-4			4-2,5
Nominal Diameter / Anma Çapı	DN	40	50	65	80	100	125	150	200	250	300	350	400	500	600
Valve Dimensions / Vana Boyutları	L	140	150	170	180	190	200	210	230	250	270	290	310	350	390
DIN EN 1171 DIN EN 558-1/14	H	195	235	260	280	310	435	455	580	720	815	925	1030	1285	1450
DIN EN 3352/2-F4	D1	160				200		250		315		400		500	
Flange Dimensions / Flanş Ölçüleri	D	150	165	185	200	220	250	285	340	395	445	505	565	670	780
DIN EN 1092 PN10	k	110	125	145	160	180	210	240	295	350	400	460	515	620	725
	Ølxn	Ø18x4			Ø18x8			Ø22x8		Ø22x12		Ø22x16	Ø26x16	Ø26x20	Ø30x20
Flange Dimensions / Flanş Ölçüleri	D	150	165	185	200	220	250	285	340	400	455	520	580	715	840
DIN EN 1092 PN16	k	110	125	145	160	180	210	240	295	355	410	470	525	650	770
	Ølxn	Ø18x4			Ø18x8			Ø22x8		Ø22x12		Ø22x16	Ø26x16	Ø26x20	Ø36x20
Weight / Ağırlık (~ for iron)	kg	11	13	18	21	26	41	52	81	120	165	222	280	445	605

RISING STEM GATE VALVE
YÜKSELEN MİLLİ SÜRGÜLÜ VANA

VYM-10

Design / Dizayn: EN 1171, DIN 3352
Face to Face / L Boyu: EN 558
Serie 14, DIN3202 F4
Pressure Rate / Basınç Aralığı: Max. PN10
Size Range / Ölçü Aralığı: DN40-DN600
Temperature / Sıcaklık: -10....+400 °C
Flange Ends / Flanş: DIN EN 1092-2/B
Test: EN 12266

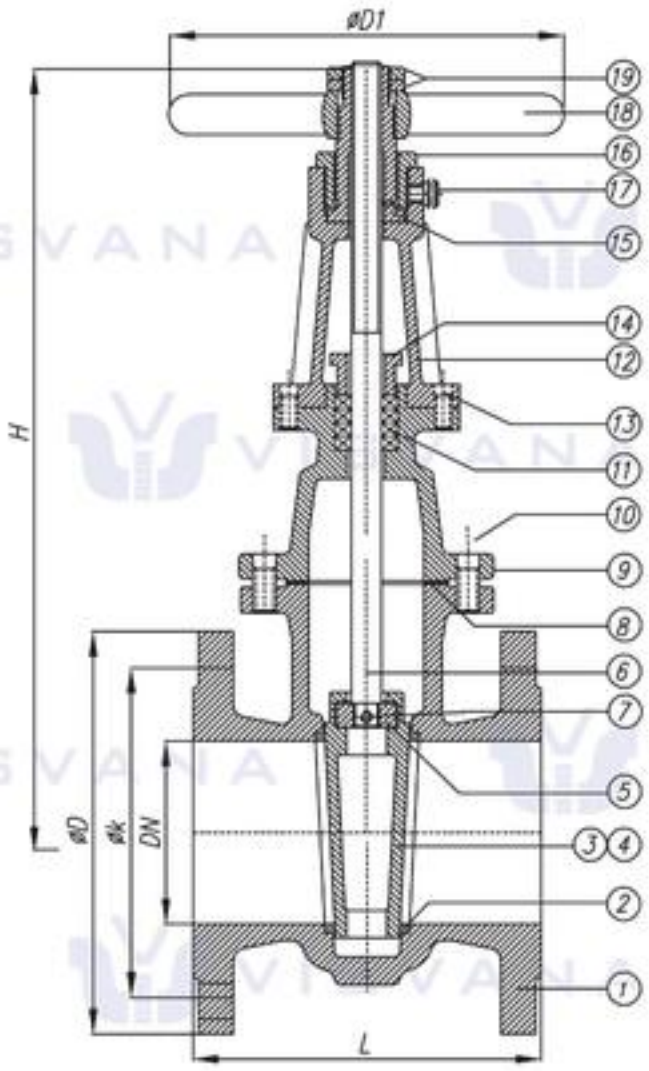

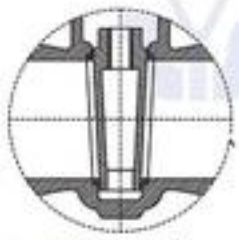

DN40...100
Wedge Type / Sürgü Tipi

DN125...600
Wedge Type / Sürgü Tipi

Pressure Range Basınç Aralığı	Cast Iron Pik Döküm GG25	Ductlle Iron Sfero Döküm GGG40	Cast Steel Çelik GSC25
DN40-DN200	10	16	16
DN250-DN300	6	10	
DN350-DN500	4	6	
DN600-DN700	2,5	4	
DN800	1,6	2,5	
DN900-DN1000	1	1,6	

NO	PART NAME	PARÇA ADI	MATERIAL / MALZEME
1	*Body*	Gövde	GG 25/GGG-40/GGG40.3/GSC25/ Bronze RG5, RG7, RG10/SS304, SS316
2	*Body seat*	Gövde Burcu	Ms 58/ Bronze / S.S
3	*Wedge*	Sürgü	GG 25/GGG-40/GGG40.3/GSC25/ Bronze RG5, RG7, RG10/SS304, SS316
4	*Wedge seat*	Sürgü Burcu	Ms 58/ Bronze / S.S
5	*Stem nut Only 125…600*	Sürgü Somunu Sadece 125..600	Bronze /GGG 40
6	*Stem*	Mil	SS420/Ms58/Som59/CuZn35Ni/ CuSn8,CuSn10/SS304,SS316
7	*Pin*	Sabitleme Pimi	Ms 58/ Bronze / S.S
8	*Gasket*	Conta	Klingerite/ EPDM/ GRAPHITE
9	*Bonnet*	Kapak	GG 25/GGG-40/GGG40.3/GSC25/ Bronze RG5, RG7, RG10/SS304, SS316
10	*Bolt*	Civata	8.8 / A2 / A4
11	*Packing*	Salmastra	GRAPHITE / TEFLON
12	*Yoke*	Boyunduruk	GG 25/GGG-40/GGG40.3/GSC25/ Bronze RG5, RG7, RG10/SS304, SS316
13	*Bolt*	Civata	8.8 / A2 / A4
14	*Packing Nut*	Salmastra Baskısı	GG 25/GGG-40/GGG40.3/GSC25/ Bronze RG5, RG7, RG10/SS304, SS316
15	*Yoke Nut*	Mil Yatağı	Ms 58 / Bronze / GGG 40
16	*Centering Nut*	Mil Yatağı Somunu	Ms 58 / Bronze / S.S
17	*Oil Nipple*	Gresörlük	St.
18	*Handwheel*	Volan	GG 20
19	*Handwheel Nut*	Volan Somunu	Ms 58 / Bronze / S.S

Nominal Pressure / Anma Basıncı	PN	10							6			4			2.5
Nominal Diameter / Anma Çapı	DN	40	50	65	80	100	125	150	200	250	300	350	400	500	600
Valve Dimensions / Vana Boyutları TS EN 1171 DIN 3352/2-F4	L	140	150	170	180	190	200	210	230	250	270	290	310	350	390
	H min	350	360	470	470	580	650	725	815	950	1080	1225	1390	1670	1920
	H max	410	470	560	560	690	790	895	1030	1220	1405	1595	1810	2195	2550
	D1	160				200		250		315		400		500	
Flange Dimensions / Flanş Ölçüleri DIN EN 1092-2 PN 10	D	150	165	185	200	220	250	285	340	395	445	505	565	670	780
	k	110	125	145	160	180	210	240	295	350	400	460	515	620	720
Weight / Ağırlık (~ for iron)	kg	11	15	19,5	24	30	44	59	106	158	232	200	310	450	600

VYM-16

RISING STEM GATE VALVE
YÜKSELEN MİLLİ SÜRGÜLÜ VANA

Design / Dizayn: EN 1171, DIN 3352
Face to Face / L Boyu: EN 558
Serie 15, DIN3202 F5
Pressure Rate / Basınç Aralığı: Max. PN40
Size Range / Ölçü Aralığı: DN40-DN600
Temperature / Sıcaklık: -20....+400 °C
Flange Ends / Flanş: DIN EN 1092-2/B
Test: EN 12266

Cast Steel / *Çelik Döküm*
GSC25
DN40-DN600 PN40
DN700-DN1000 PN 40

Pressure Range Basınç Aralığı	Cast Iron Pik Döküm GG25	Ductile Iron Sfero Döküm GGG40
DN40-DN600	PN16	PN25
DN700-DN1000	PN10	PN16

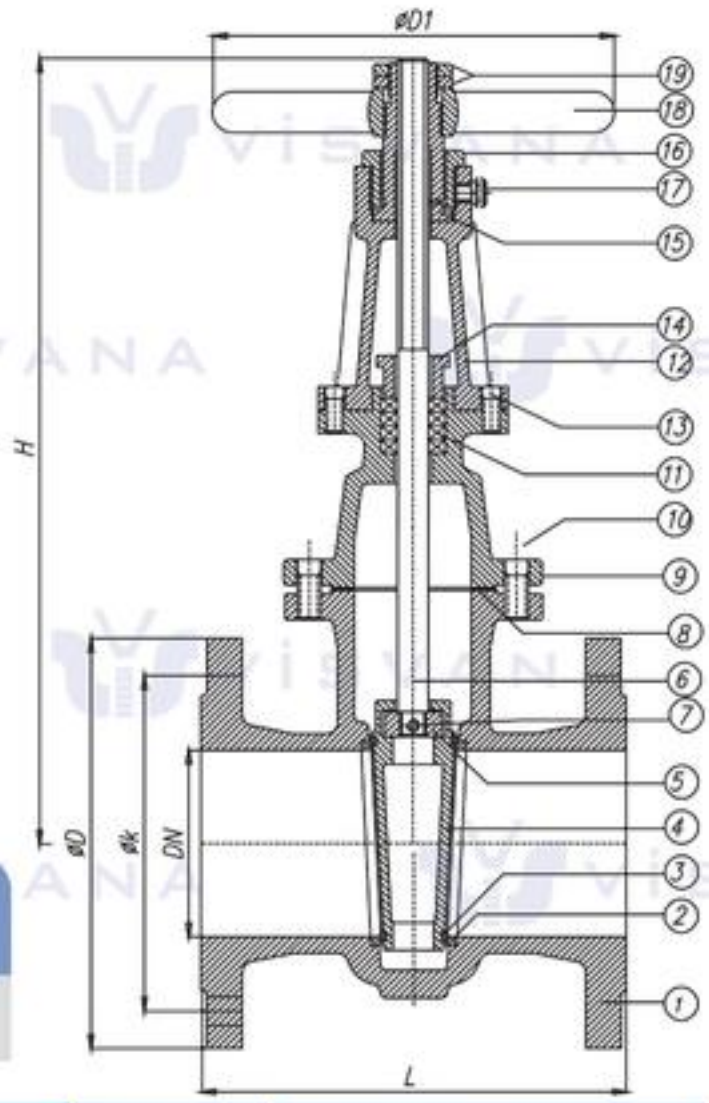

NO	PART NAME	PARÇA ADI	MATERIAL / MALZEME
1	*Body*	Gövde	GG 25 / GGG-40 / GGG40.3 / GSC25 / Bronze RG5, RG7, RG10/ SS304, SS316
2	*Body seat*	Gövde Burcu	Ms 58/ Bronze / S.S
3	*Wedge*	Sürgü	GG 25 / GGG-40 / GGG40.3 / GSC25 / Bronze RG5, RG7, RG10/ SS304, SS316
4	*Wedge seat*	Sürgü Burcu	Ms 58/ Bronze / S.S
5	*Stem nut*	Sürgü Somunu	Ms 58 /Bronze / S.S
6	*Stem*	Mil	SS420/Ms58/Som59/CuZn35Ni/CuSn8, CuSn10/SS304,SS316
7	*Pin*	Sabitleme Pimi	Ms 58/ Bronze / S.S
8	*Gasket*	Conta	KLINGERITE/ EPDM/ GRAPHITE
9	*Bonnet*	Kapak	GG 25 / GGG-40 / GGG40.3 / GSC25 / Bronze RG5, RG7, RG10/ SS304, SS316

NO	PART NAME	PARÇA ADI	MATERIAL / MALZEME
10	*Bolt*	Civata	8.8 / A2 / A4
11	*Packing*	Salmastra	GRAPHITE / TEFLON
12	*Yoke*	Boyunduruk	GG 25/GGG-40/GGG40.3/GSC25/ Bronze RG5, RG7, RG10/SS304, SS316
13	*Bolt*	Civata	8.8 / A2 / A4
14	*Packing Nut*	Salmastra Baskısı	GG 25/GGG-40/GGG40.3/GSC25/ Bronze RG5, RG7, RG10/SS304, SS316
15	*Yoke Nut*	Mil Yatağı	Ms 58 / Bronze / GGG 40
16	*Centering Nut*	Mil Yatağı Somunu	Ms 58 / Bronze / S.S
17	*Oil Nipple*	Gresörlük	St.
18	*Handwheel*	Volan	GG 20
19	*Handwheel Nut*	Volan Somunu	Ms 58 / Bronze / S.S

Nominal Pressure / Anma Basıncı	PN	10 - 16 - 25 - 40													
Nominal Diameter / Anma Çapı	DN	40	50	65	80	100	125	150	200	250	300	350	400	500	600
Valve Dimensions / Vana Boyutları TS EN 1171 DIN 3352/3-	L	240	250	270	280	300	325	350	400	450	500	550	600	700	800
	H min	365	380	450	470	580	650	725	815	1135	1220	1320	1530	1915	2070
	H max	425	450	540	560	690	790	895	1030	1430	1545	1700	1970	2465	2720
	D1	200		250			315		400		500		630	800	
Flange Dimensions / Flanş Ölçüleri EN 1092 PN 10	D	150	165	185	200	220	250	285	340	395	445	505	565	670	780
	k	110	125	145	160	180	210	240	295	350	400	460	515	620	725
Flange Dimensions / Flanş Ölçüleri EN 1092-2 PN 16	D	150	165	185	200	220	250	285	340	405	460	520	580	715	840
	k	110	125	145	160	180	210	240	295	355	410	470	525	650	770
Weight / Ağırlık (~ for iron)	kg	19	21,5	30	34,5	46	57	71	148	205	285	380	535	860	1160

Not: Tabloda yer olmadığından PN 25 ve PN 40 flanş ölçülerine teknik bilgiler kısmındaki flanş ölçülerinden bakabilirsiniz.

RESILIENT SEAT GATE VALVE
ELASTOMER SÜRGÜLÜ VANA

VESV-10-16

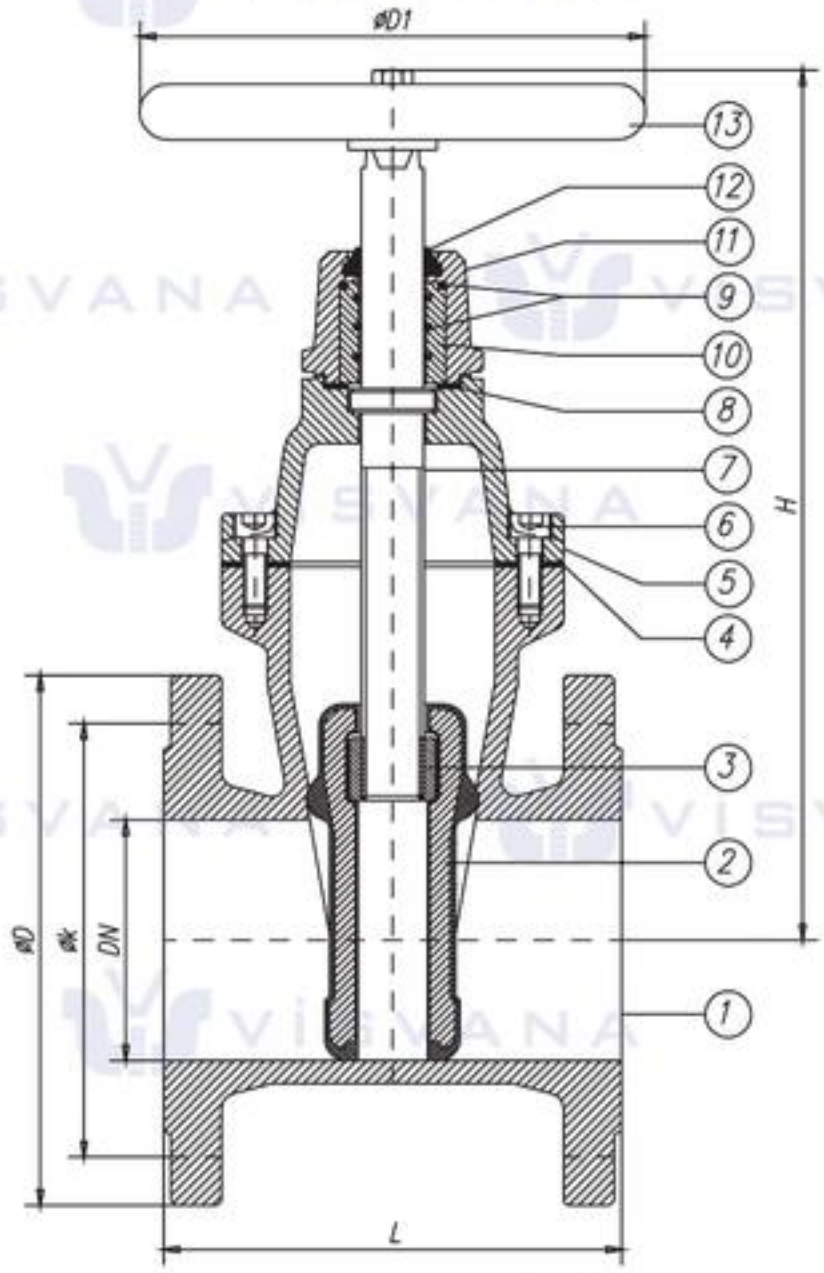

O-RING SYSTEM / O-RING SİSTEMLİ
Design / Dizayn: EN 1171
Face to Face / L boyu: EN558 Serie 14 DIN 3202 F4
Pressure Rate / Basınç Aralığı: Max. PN16
Size Range / Ölçü Aralığı: DN40-DN600
Flange Ends / Flanş: DIN EN 1092-2/B
Test: EN 12266

1
Gate Valves

NO	PART NAME	PARÇA ADI	MATERIAL / MALZEME	NO	PART NAME	PARÇA ADI	MATERIAL / MALZEME
1	*Body*	Gövde	GGG-25 / GGG 40	8	*Gasket*	Conta	EPDM / NBR
2	*Wedge*	Sürgü	GGG-40 + Rubber&Nylon	9	*O-Ring*	O-Ring	EPDM / NBR
3	*Stem nut*	Sürgü Somunu	Ms 58 /Bronze	10	*Teflon Bush*	Mil Yatağı	PTFE (Teflon)
4	*Gasket*	Conta	EPDM / NBR	11	*Gland*	Glend	GGG-25 / GGG 40
5	*Bonnet*	Kapak	GGG-25 / GGG 40	12	*Cleand Gasket*	Toz Contası	EPDM / NBR
6	*Bolt*	Civata	8,8	13	*Handwheel*	Volan	GG 20
7	*Stem*	Mil	AISI 420,304,316				

Nominal Pressure / Anma Basıncı	PN	10 - 16													
Nominal Diameter / Anma Çapı	DN	40	50	65	80	100	125	150	200	250	300	350	400	500	600
Valve Dimensions / Vana Boyutları DIN EN 1171 DIN EN 558-1-14	L	140	150	170	180	190	200	210	230	250	270	290	310	350	390
	H	230	240	285	310	345	385	460	535	635	710	840	920	990	1125
	D1	160				200		250		315		400		500	
Flange Dimensions / Flanş Ölçüleri DIN EN 1092-2 PN 10	D	150	165	185	200	220	250	285	340	395	445	505	565	670	780
	k	110	125	145	160	180	210	240	295	350	400	460	515	620	725
	Øxn	Ø18x4			Ø18x8			Ø22x8		Ø22x12		Ø22x16	Ø26x16	Ø26x20	Ø30x20
Weight / Ağırlık	kg	9,3	11,5	16,0	19,5	27,0	29,0	46,0	63,0	90,0	125,0	210,0	270,0	435,0	655,0
Flange Dimensions / Flanş Ölçüleri DIN EN 1092-2 PN 16	D	150	165	185	200	220	250	285	340	405	460	520	580	715	840
	k	110	125	145	160	180	210	240	295	355	410	470	525	650	770
	Øxn	Ø18x4			Ø18x8			Ø22x8	Ø22x12	Ø26x12		Ø26x16	Ø30x16	Ø33x20	Ø36x20
Weight / Ağırlık (~ for iron)	kg	9,3	11,5	16,0	19,5	27,0	37	46,0	63,0	94,0	130,0	220,0	280,0	450,0	670,0

VESV-10-16-25

RESILIENT SEAT GATE VALVE
ELASTOMER SÜRGÜLÜ VANA

Design / Dizayn: EN 1171, DIN 3352
Face to Face / L Boyu: EN 558
Serie 15, DIN3202 F5
Pressure Rate / Basınç Aralığı: PN10-16-25
Size Range / Ölçü Aralığı: DN40-DN300
Temperature / Sıcaklık: -20....+120 °C
Flange Ends / Flanş: DIN EN 1092-2/B
Test: EN 12266

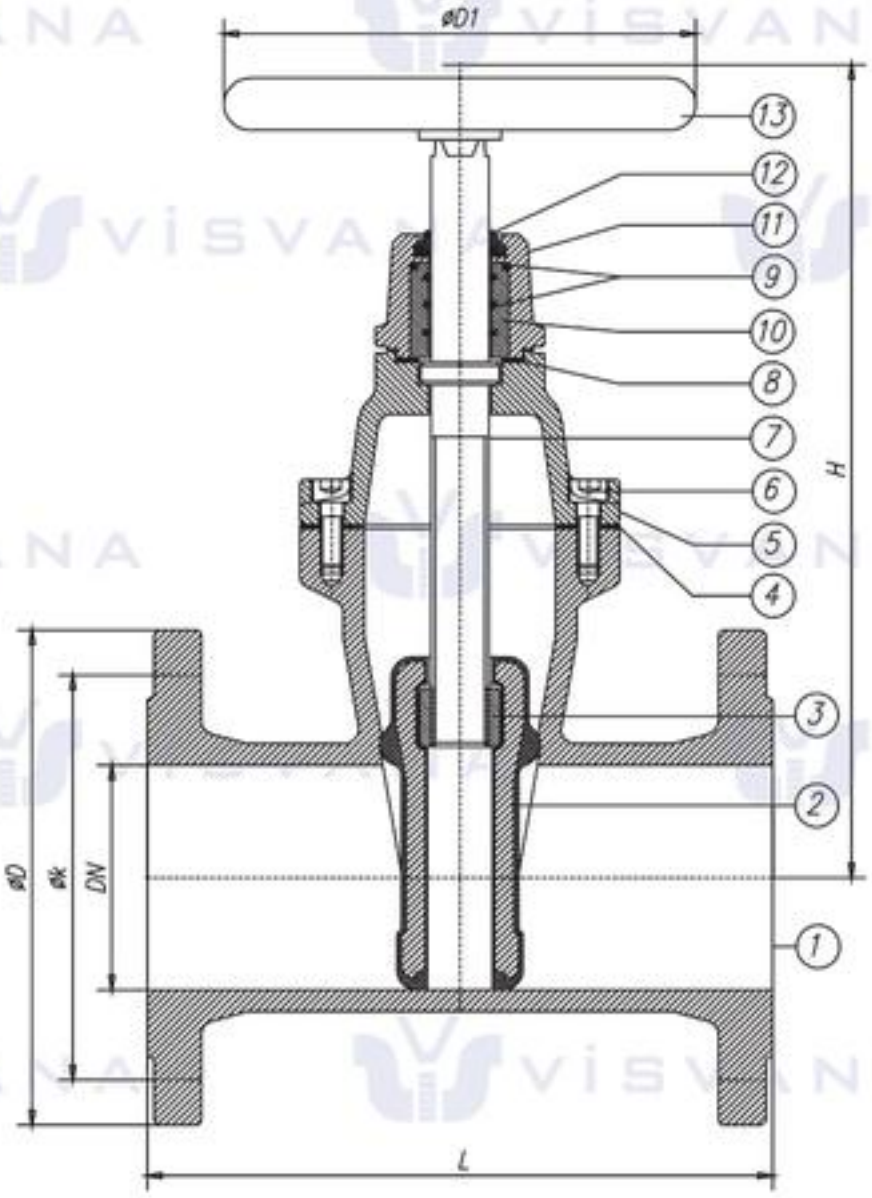

NO	PART NAME	PARÇA ADI	MATERIAL / MALZEME	NO	PART NAME	PARÇA ADI	MATERIAL / MALZEME
1	*Body*	Gövde	GGG-40	7	*Stem*	Mil	AISI 420 (Paslanmaz Çelik)
2	*Wedge*	Sürgü	GGG-40 + EPDM / NBR	8	*Gasket*	Conta	EPDM / NBR
3	*Stem nut*	Sürgü Somunu	Ms 58 /Bronze	9	*O-Ring*	O-Ring	EPDM / NBR
4	*Gasket*	Conta	EPDM / NBR	10	*Yoke Nut*	Mil Yatağı	PTFE (Teflon)
5	*Bonnet*	Kapak	GGG-40	11	*Gland*	Glend	GGG-40
6	*Bolt*	Civata	8,8	12	*Cleand Gasket*	Toz Contası	EPDM / NBR
				13	*Handwheel*	Volan	GG 20

Nominal Pressure / Anma Basıncı	PN	10 - 16 - 25									
Nominal Diameter / Anma Çapı	DN	40	50	65	80	100	125	150	200	250	300
Valve Dimensions / Vana Boyutları DIN EN 1171 DIN 3352 2/4B	L	240	250	270	280	300	325	350	400	450	500
	H	230	240	285	310	345	385	460	535	635	710
	D1	200		250		315			400	500	
Flange Dimensions / Flanş Ölçüleri DIN EN 1092-1-2 PN 16	D	150	165	185	200	220	250	285	340	405	455
	k	110	125	145	160	180	210	240	295	355	410
Weight / Ağırlık (~ for iron)	kg	9,3	11,5	16	19,5	27	29	46	63	94	130
Flange Dimensions / Flanş Ölçüleri DIN EN 1092-1-2 PN 25	D	150	165	185	200	235	270	300	360	425	485
	k	110	125	145	160	190	220	250	310	370	430
Weight / Ağırlık (~ for iron)	kg	10,2	12,5	17	21,5	30	39	50	81	107	154

GATE VALVE PN64
SÜRGÜLÜ VANA PN64

VYM-64

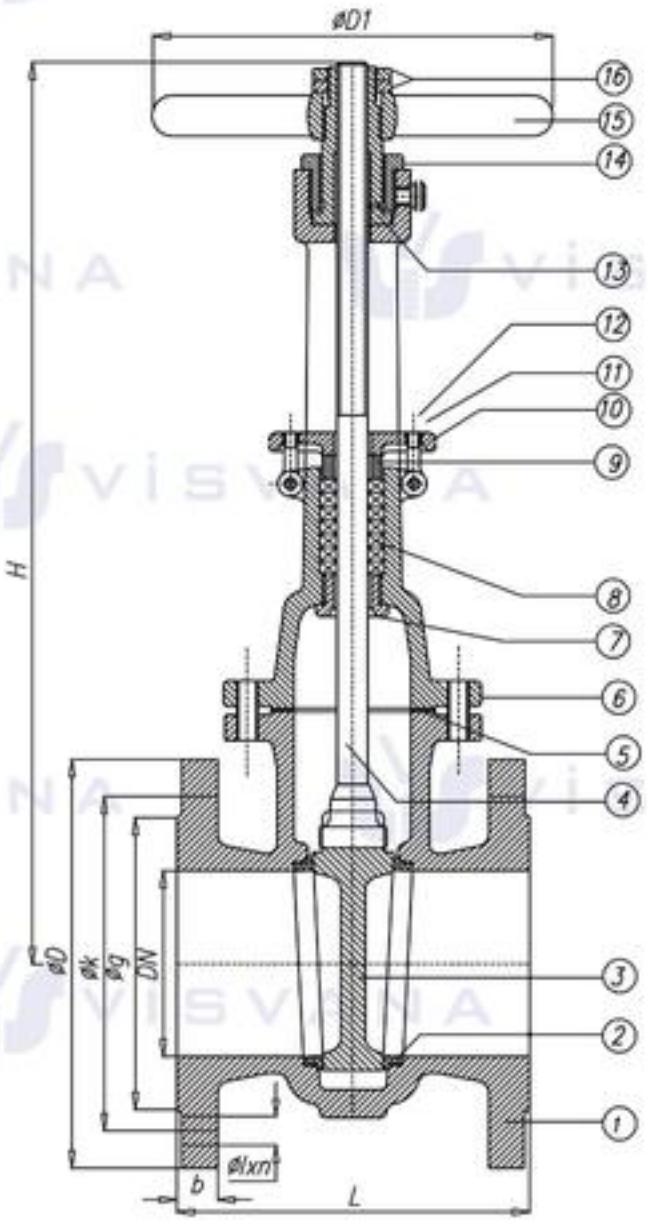

Design / Dizayn: EN 1171, DIN 3352
Face to Face / L Boyu: EN 558 Serie 26
DIN3202 F7
Pressure Rate / *Basınç Aralığı*: PN64
Size Range / *Ölçü Aralığı*: DN 50-DN 600
Temperature / *Sıcaklık*: -20....+400 °C
Flange Ends / *Flanş*: DIN EN 1092-2/B
Test: DIN EN 12266

NO	PART NAME	PARÇA ADI	MATERIAL / MALZEME
1	*Body*	Gövde	GS-C25(GP240GH)(1.0619)(A216 WCB)/ A217 WC6, WC9 / SS304 / SS316
2	*Seats*	Burçlar	13Cr/Stellite 6, Stellite 12/SS304/SS316
3	*Wedge*	Sürgü	GS-C25(GP240GH)(1.0619)(A216 WCB)/ A217 WC6, WC9 / SS304 / SS316
4	*Stem*	Mil	AISI420(X20Cr13)(A182 F6)SS304/SS316
5	*Gasket*	Conta	Graphite / Graphite + SS304
6	*Bonnet*	Kapak	GS-C25(GP240GH)(1.0619)(A216 WCB)/ A217 WC6, WC9 / SS304 / SS316
7	*Back Seat*	Geri Ring	13Cr(X20Cr13)(A182 F6)SS304/SS316
8	*Packing*	Salmastra	Graphite / PTFE

NO	PART NAME	PARÇA ADI	MATERIAL / MALZEME
9	*Packing Nut*	Salmastra Baskısı	GS-C25(GP240GH)(1.0619)(A216 WCB)/ A217 WC6, WC9 / SS304 / SS316
10	*Gland Flange*	Baskısı Flanşı	GS-C25(GP240GH)(1.0619)(A216 WCB)/ A217 WC6, WC9 / SS304 / SS316
11	*Eye Bolt*	Mapa Civata	Cr. Mo Alaşımlı Çelik/Cr Mo Alloy Steel A193 Gr. B7
12	*Nut*	Somun	Karbon Çeliği/Carbon Steel A194 Gr. 2H
13	*Yoke Nut*	Mil Yatağı	Bronze
14	*Centering Nut*	Mil Yatağı Somunu	Bronze
15	*Handwheel*	Volan	Sfero Döküm / Ductile Iron
16	*Handwhell Nut*	Volan Somunu	SS420 / Bronze

Note: Kindly contact to technical department for high pressure and temperature application.
Not: Özel çalışma basıncı ve sıcaklık şartları için alaşımlı çelik malzemelerden üretimimiz mevcuttur. Lütfen teknik birimle iletişime geçiniz.

Nominal Pressure / Anma Basıncı	PN	64												
Nominal Diameter / Anma Çapı	DN	50	65	80	100	125	150	200	250	300	350	400	500	600
Valve Dimensions / Vana Boyutları DIN EN 1171, DIN 3352	L	250	290	310	350	400	450	550	650	750	850	950	1150	1350
	H	390	445	505	595	620	780	1095	1290	1450	1550	1720	2080	2520
	ØM	200	200	250	250	250	355	355	450	500	600	600	660	720
Flange Dimensions / Flanş Ölçüleri DIN EN 1092-1 PN64	ØD	180	205	215	250	295	345	415	470	530	600	670	800	930
	Øk	135	160	170	200	240	280	345	400	460	525	585	705	820
	Øg	102	122	138	162	188	218	285	345	410	465	435	615	735
	b	26	26	28	30	34	36	42	46	52	56	60	68	76
	Ø1xn	Ø22x4	Ø22x8	Ø22x8	Ø26x8	Ø30x8	ø33x8	Ø36x12	Ø36x12	Ø36x16	Ø39x16	Ø42x16	Ø48x20	Ø56x20
Weight / Ağırlık (~ for iron)	kg	20	25	30	48	62	84	120	225	280	350	490	725	1350

VYM-100

GATE VALVE PN100
SÜRGÜLÜ VANA PN100

Design / Dizayn: EN 1171, DIN3352
Face to Face / L Boyu: EN 558 Serie 26
DIN 3202 F7
Pressure Rate / *Basınç Aralığı*: PN100
Size Range / *Ölçü Aralığı*: DN 50-DN 300
Temperature / *Sıcaklık*: -20....+400 °C
Flange Ends / *Flanş*: DIN EN 1092-1
Test: DIN EN 12266

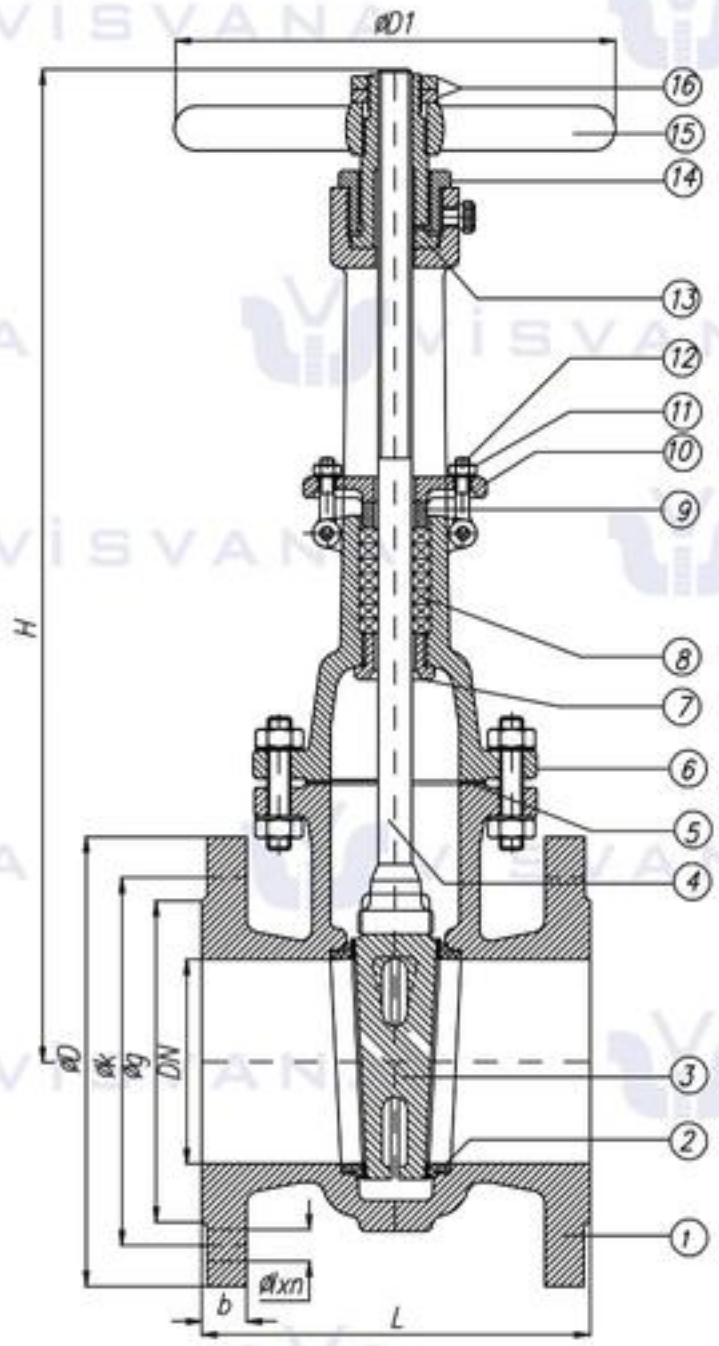

DIN 2401 MALZEME VE SICAKLIK BAĞLANTI NORMU						
MATERIAL / MALZEME	*TEMPERATURE* / SICAKLIK °C					
G-SC 25 (GP 240GH+N)	-20/ +120/	+200/	+250/	+300/	+350/	+400/
ASTM A Gr. A216 WCB	100 Bar	80 Bar	70 Bar	60 Bar	56 Bar	50 Bar

NO	*PART NAME*	PARÇA ADI	*MATERIAL* / MALZEME
1	*Body*	Gövde	GS-C25(GP240GH)(1.0619)(A216 WCB)/ A217 WC6, WC9 / SS304 / SS316
2	*Seats*	Burçlar	13Cr/Stellite 6, Stellite 12/SS304/SS316
3	*Wedge*	Sürgü	GS-C25(GP240GH)(1.0619)(A216 WCB)/ A217 WC6, WC9 / SS304 / SS316
4	*Stem*	Mil	AISI420(X20Cr13)(A182 F6)SS304/SS316
5	*Gasket*	Conta	Graphite / Graphite + SS304
6	*Bonnet*	Kapak	GS-C25(GP240GH)(1.0619)(A216 WCB)/ A217 WC6, WC9 / SS304 / SS316
7	*Back Seat*	Geri Ring	13Cr(X20Cr13)(A182 F6)SS304/SS316
8	*Packing*	Salmastra	Graphite / PTFE

NO	*PART NAME*	PARÇA ADI	*MATERIAL* / MALZEME
9	*Packing Nut*	Salmastra Baskısı	GS-C25(GP240GH)(1.0619)(A216 WCB)/ A217 WC6, WC9 / SS304 / SS316
10	*Gland Flange*	Baskısı Flanşı	GS-C25(GP240GH)(1.0619)(A216 WCB)/ A217 WC6, WC9 / SS304 / SS316
11	*Eye Bolt*	Mapa Civata	Cr. Mo Alaşımlı Çelik/Cr Mo Alloy Steel A193 Gr. B7
12	*Nut*	Somun	Karbon Çeliği/Carbon Steel A194 Gr. 2H
13	*Yoke Nut*	Mil Yatağı	Bronze
14	*Centering Nut*	Mil Yatağı Somunu	Bronze
15	*Handwheel*	Volan	Sfero Döküm / Ductile Iron
16	*Handwhell Nut*	Volan Somunu	SS420 / Bronze

Nominal Pressure / Anma Basıncı	PN	100								
Nominal Diameter / Anma Çapı	DN	50	65	80	100	125	150	200	250	300
Valve Dimensions / Vana Boyutları DIN EN 558-1/26	L	250	290	310	350	400	450	550	650	750
	H	490	540	575	675	745	800	890	1050	1200
	ØM	250	250	310	415	500	500	600	720	720
Flange Dimensions / Flanş Ölçüleri DIN EN 1092-1 PN100	ØD	195	220	230	265	315	355	430	515	585
	Øk	145	170	180	210	250	290	360	430	500
	Øg	102	122	138	162	188	218	285	345	410
	b	30	34	36	40	40	44	52	60	68
	Ø1xn	Ø22x4	Ø22x8	Ø22x8	Ø30x8	Ø33x8	Ø33x12	Ø36x12	Ø39x12	Ø42x16
Weight / Ağırlık (~ for iron)	kg	25	32	36	55	88	110	155	310	355

KNIFE GATE VALVE
BIÇAK SÜRGÜLÜ VANA

VBSV-10

Face to Face / *L Boyu*: EN 558 Serie 20
Pressure Rate / *Basınç Aralığı*: Max. PN16
Size Range / *Ölçü Aralığı*: DN50-DN1000
Temperature / *Sıcaklık*: -20....+120 °C
Ends / *Bağlantı*: Wafer, Lug, Semi-Lug
Test: DIN EN 12266

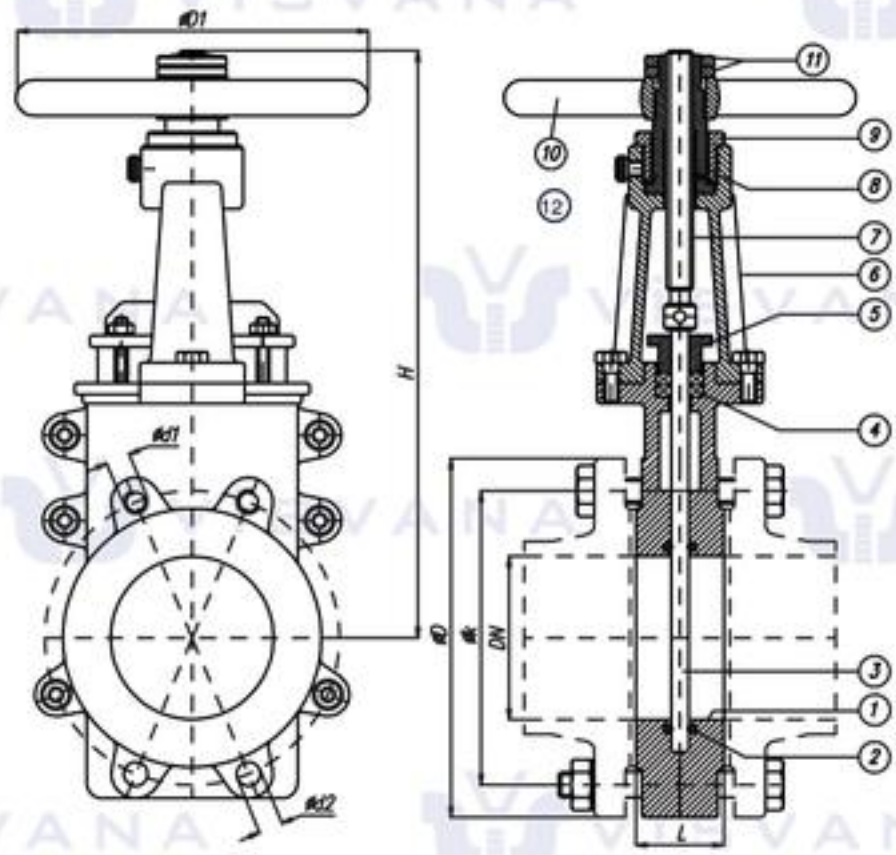

NO	PART NAME	PARÇA ADI	MATERIAL / MALZEME	NO	PART NAME	PARÇA ADI	MATERIAL / MALZEME
1	*Body*	Gövde	GG25/GGG40/GSC25/SS304/SS316/Bronze	7	*Stem*	Mil	SS420/SS304/SS316
2	*Body Seat*	Gövde Siti	EPDM/NBR/PTFE/Viton	8	*Yoke Nut*	Mil Yatağı	GGG40/Bronze
3	*Knife*	Bıçak	AISI 304 / AISI 316	9	*Catering Nut*	Yatak Somunu	Bronze/SS420
4	*Packing*	Salmastra Baskısı	Grafite / PTFE	10	*Handwheel*	Volan	GG20
5	*Packing Nut*	Salmastra	GG25/GGG40/GSC25/SS304/SS316/Bronze	11	*Handwheel Nut*	Volan Somunu	Çelik /Steel
6	*Yoke*	Boyunduruk	GG25/GGG40/GSC25/SS304/SS316/Bronze	12	*Oil Nipple*	Gresörlük	Galvaniz/SS304

Nominal Pressure / Anma Basıncı	PN	16-10							10-6			6-4			4-2,5		3-2,5	2,5-2
Nominal Diameter / Anma Çapı	DN	50	65	80	100	125	150	200	250	300	350	400	500	600	700	800	900	1000
Valve Dimensions / Vana Boyutları	L	43	46	46	52	56	56	60	68	78	78	102	127	154	165	190	203	216
	H	450	470	500	550	600	650	750	870	1000	1100	1200	1400	1600	1850	2100	2350	2600
	D1	200	200	200	225	225	250	250	315	360	400	400	400	500	630	630	630	630
Flange Dimensions / Flanş Ölçüleri	ØD	165	185	200	220	250	285	340	395	445	505	565	670	780	895	1015	1115	1230
DIN 2501/TS 810/PN 10	Øk	125	145	180	180	210	240	295	350	400	460	515	620	725	840	950	1050	1160
DIN EN 1092-2	Ød1xn	M16x2					M22x2		M20x4		M20x6	M24x6		M27x6	M27x8	M30x8	M30x14	M33x14
	Ød2xn	M18x2					M20x2		M22x4			M26x6		M30x6	M30x8	M33x8	M33x14	M36x14
Flange Dimensions / Flanş Ölçüleri	ØD	165	185	220	250	250	285	340	405	460	420	580	715	840	910	1025	1125	1255
DIN 2501/TS 810/PN 16	Øk	125	145	160	210	210	240	295	355	410	470	525	650	770	840	950	1050	1170
DIN EN 1092-2	Ød1xn	M16x2					M20x2	M20x4	M24x4		M24x6	M27x6	M30x6	M33x6	M33x8	M36x8	M36x14	M39x14
	Ød2xn	Ø 18x2					Ø22x2	Ø22x4	Ø 26x4		Ø26x6	Ø30x6	Ø33x6	Ø36x6	Ø36x8	Ø39x8	Ø39x14	Ø42x14
Weight / Ağırlık (~ for iron)	kg	12	13	15	19	23	29	43	68	98	142	170	262	382	550	950	1250	1500

Globe Valves

GLOB VANALAR

Products & Technical Data

Teknik Bilgiler

www.visvana.com

VDB-10-16-25-40

STRAIGHT GLOBE VALVE
DÜZ TİP GLOB VANA

Design / Dizayn : DIN 3356
Face to Face / L Boyu : EN 558 Serie 1, DIN 3202 F1
Pressure / Basınç : PN 10 -16 - 25 - 40
Size Range / Ölçü Aralığı : DN15 - DN600
Flange Ends / Flanş : EN 1092-2/B
Options / Opsiyon : Regulating Disc, ANSI Flange
Tests / Testler : EN 12266

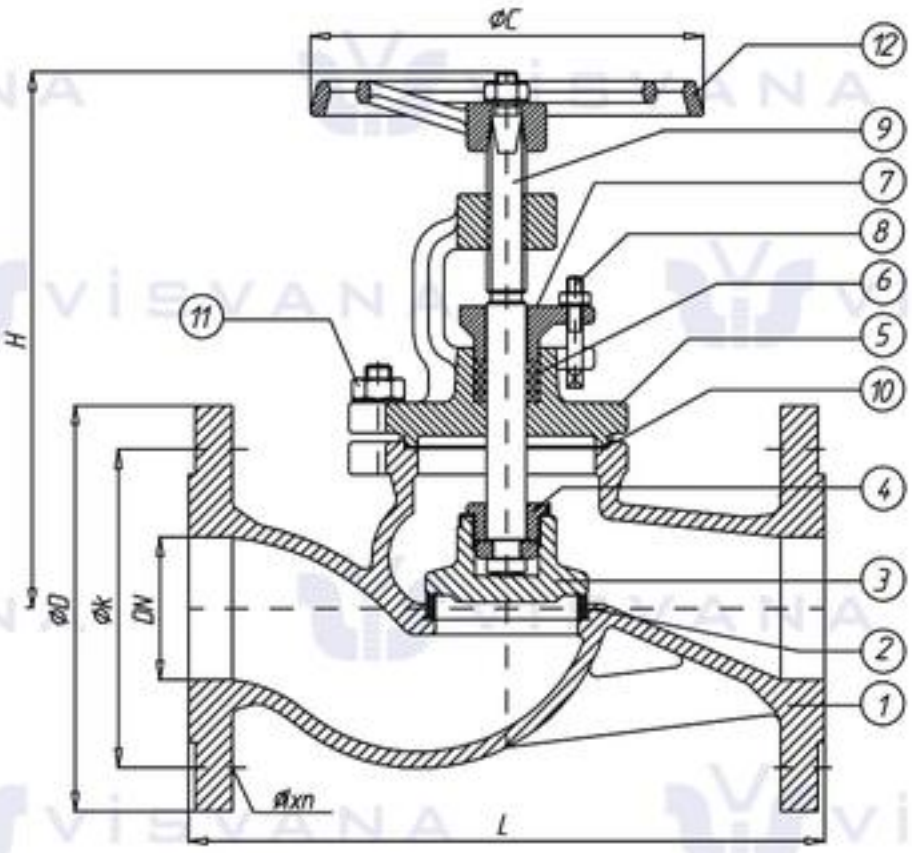

NO	PART NAME	PARÇA ADI	MATERIAL / MALZEME
1	*Body*	Gövde	GG-25 / GGG-40 / GS-25 Bronze/AISI 304/316/Monel/GS-17CrMo5,5
2	*Seats Ring*	Burç	AISI 304, 316, 13Cr Bronze, Stellite 6-21 PTFE, NBR, EPDM
3	*Disc*	Klape	AISI 304, 316, 13Cr Bronze, GS-C 25 PTFE
4	*Disc Nut*	Baskı	Ms 58/S.S
5	*Bonnet*	Kapak	GG-25 / GGG-40 / GS-25 Bronze AISI 304, 316 Monel GS-17CrMo5,5

NO	PART NAME	PARÇA ADI	MATERIAL / MALZEME
6	*Packing*	Salmastra	Graphite
7	*Gland*	Salm. Baskısı	GG-25 / GGG-40 / GS-25 Bronze/ AISI 304/316/Monel/GS-17CrMo5,5
8	*T Stud, nut*	T Sapl. Somun	5.6/8
9	*Stem*	Mil	AISI 420, 304, 306, 13Cr, Bronze, CuSn8, Ms-58
10	*Gasket*	Conta	Klingerite
11	*Stud, nut*	Sapl. Somun	5.6/8
12	*Handwheel*	El Çarkı	GG 25

Nominal Diameter / Anma Çapı	DN	15	20	25	32	40	50	65	80	100	125	150	200	250	300	350	400	450	500	600
Valve Dimensions / Vana Boyutları DIN 3356/2 DIN EN 558-1	L	130	150	160	180	200	230	290	310	350	400	480	600	730	850	980	1100	1200	1250	1450
	ØC	120		140		160		180	200	225	250	285	320	400	460		640			
	H max.	185	185	195	205	230	240	275	290	350	410	430	525	630	700	760	840	915	980	1200
Flange Dimensions / Flanş Ölçüleri DIN EN 1092 PN 10	D	95	105	115	140	150	165	185	200	220	250	285	340	400	455	505	565	615	670	780
	k	65	75	85	100	110	125	145	160	180	210	240	295	350	400	460	515	565	620	725
	Øxn	Ø14x4			Ø18x4				Ø18x8			Ø22x8		Ø22x12		Ø22x16	Ø26x16	Ø26x20		Ø30x20
Weight / Ağırlık (~ for iron)	kg	3,6	4,25	5,15	6,75	9,60	12,0	16,4	23,2	33,0	55,0	87,5	130	204	280	370	505	705	915	1110
Flange Dimensions / Flanş Ölçüleri DIN EN 1092 PN 16	D	95	105	115	140	150	165	185	200	220	250	285	340	400	455	520	580	640	715	840
	k	65	75	85	100	110	125	145	160	180	210	240	295	355	410	470	525	585	650	770
	Øxn	Ø14x4			Ø18x4				Ø18x8			Ø22x8	Ø22x12	Ø26x12		Ø26x16	Ø30x16	Ø30x20	Ø33x20	Ø36x20
Weight / Ağırlık (~ for iron)	kg	3,6	4,25	5,15	6,75	9,60	12,0	16,4	23,2	33,0	55,0	87,5	136	212	290	380	515	715	925	1125
Flange Dimensions / Flanş Ölçüleri DIN EN 1092 PN 25	D	95	105	115	140	150	165	185	200	235	270	300	360	425	485	555	620	670	730	845
	k	65	75	85	100	110	125	145	160	190	220	250	310	370	430	490	550	600	660	770
	Øxn	Ø14x4			Ø18x4			Ø18x8		Ø22x8	Ø26x8		Ø26x12	Ø30x12	Ø30x16	Ø33x16	Ø36x16	Ø36x20		Ø39x20
Weight / Ağırlık (~ for iron)	kg	4	4,5	5,75	6,85	10,2	12,5	18,5	25,0	35,0	58,0	92,0	150	230	300	395	530	730	950	1150
Flange Dimensions / Flanş Ölçüleri DIN EN 1092 PN 40	D	95	105	115	140	150	165	185	200	235	270	300	375	450	515	580	660	685	755	890
	k	65	75	85	100	110	125	145	160	190	220	250	320	385	450	510	585	610	670	795
	Øxn	Ø14x4			Ø18x4			Ø18x8		Ø22x8	Ø26x8		Ø30x12	Ø33x12	Ø33x16	Ø36x16	Ø39x16	Ø39x20	Ø42x20	Ø48x20
Weight / Ağırlık (~ for iron)	kg	4,7	5	6	7	11,5	13	21	27	36	60,5	101	164	235	315	410	550	750	970	1200

ANGLE TYPE GLOBE VALVE
KÖŞE TİP GLOB VANA

VAB-10-16-25-40

Design / Dizayn : DIN 3356
Center to Face / L Boyu : EN 558 Serie 8, DIN 3202 F32
Pressure / Basınç : PN 10 -16 - 25 - 40
Size Range / Ölçü Aralığı : DN15 - DN600
Flange Ends / Flanş : EN 1092-2/B
Options / Opsiyon: Regulating Disc
Tests / Testler : EN 12266

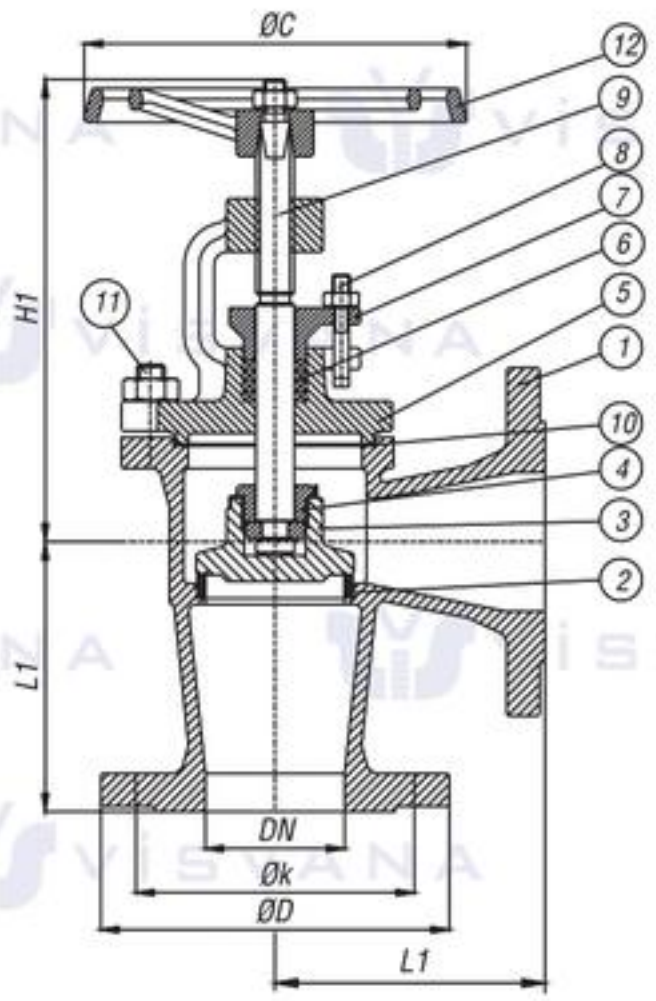

NO	PART NAME	PARÇA ADI	MATERIAL / MALZEME	NO	PART NAME	PARÇA ADI	MATERIAL / MALZEME
1	*Body*	Gövde	GG 25/GGG-40/GGG-40/GSC25/Bronze RG5/304/316	7	*Gland*	Salm. Baskısı	GG 25/GGG-40/GS-C25/Bronze/RG5/304/316
2	*Seat Ring*	Burc	1.4301 / Bronze	8	*T Stud, Nut*	T Saplama, Somun	5.6/8
3	*Disc*	Klape	1.4301 / Bronze	9	*Spindle*	Mil	1.4021/Cu Zn35Ni/CuSn8
4	*Disc Nut*	Baskı	Ms 58	10	*Gasket*	Conta	Klingerite
5	*Bonnet*	Kapak	GG 25 / GGG-40 / GS-C25/Bronze RG5/304/316	11	*Stud, Nut*	Saplama, Somun	5,6/8
6	*Packing*	Salmastra	Grophite	12	*Handwheel*	El Çarkı	GG 25

					PN16			PN40		
							Ağırlık kg			Ağırlık kg
DN	L1	H1	Strok	ØC	ØD	Øk	Açılı Angle	ØD	Øk	Açılı Angle
15	90	155	7	120	95	65	4	95	65	4
20	95	155	7	120	105	75	4	105	75	5
25	100	170	9	140	115	85	5	115	85	6
32	105	175	11	140	140	100	7	140	100	8
40	115	195	15	160	150	110	11	150	110	13
50	125	205	18	160	165	125	13	165	125	15
65	145	225	23	180	185	145	19	185	145	23
80	155	250	28	200	200	160	24	200	160	27
100	175	305	35	225	220	180	33	235	190	39
125	200	315	43	250	250	210	48	270	220	58
150	225	380	50	300	285	240	62	300	250	75
200	275	425	68	400	340	295	128	375	320	155
250	325	470	80	520	405	355	135	450	385	162
300	375	675	100	520	460	410	270	515	450	320

Not: DN600'a kadar üretimimiz vardır.
Note: We have production till DN600.

VYB-10-16-25-40

Y TYPE GLOBE VALVE
Y TİPİ GLOB VANA

Design / Dizayn : DIN 3356
Face to Face / L Boyu : EN 558 Serie 1, DIN 3202 F1
Pressure / Basınç : PN 10 -16 - 25 - 40
Size Range / Ölçü Aralığı: DN15 - DN300
Flange Ends / Flanş: EN 1092-2/B
Tests / Testler : EN 12266

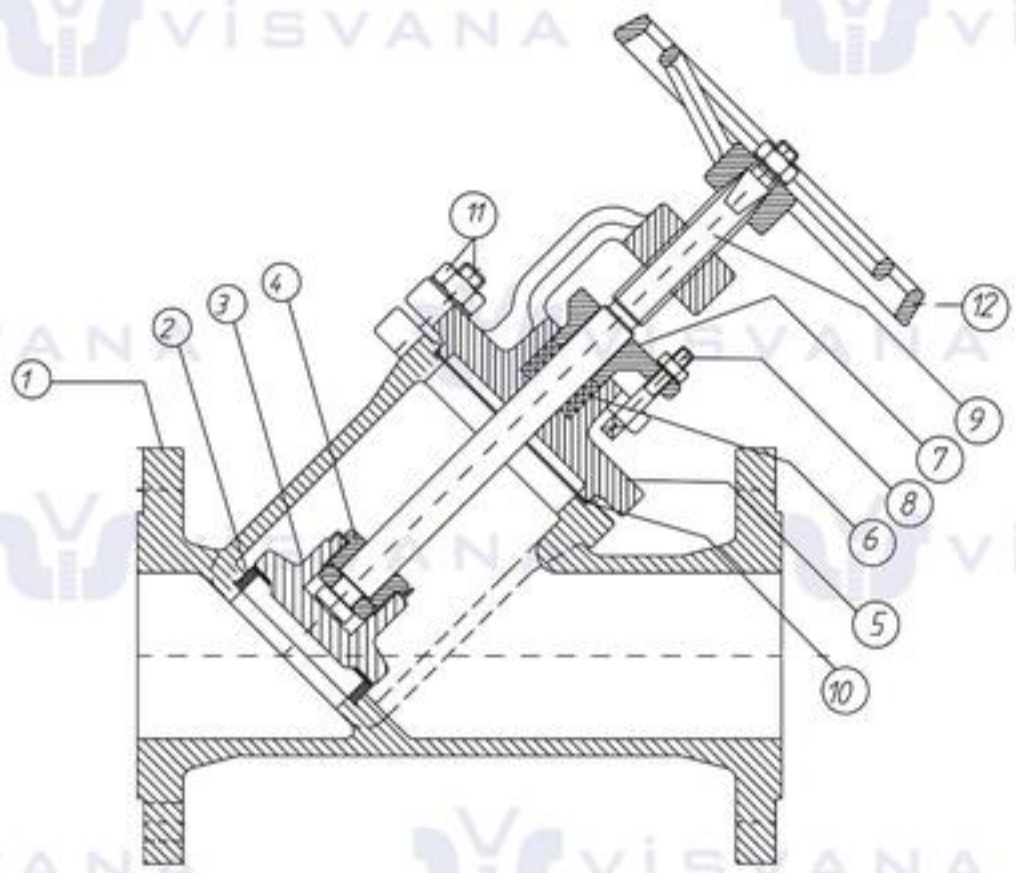

NO	PART NAME	PARÇA ADI	MATERIAL / MALZEME	NO	PART NAME	PARÇA ADI	MATERIAL / MALZEME
1	*Body*	Gövde	G-SC 25(GP240GH + N) + Stellite	7	*Gland*	Salm. Baskısı	G-SC 25(GP240GH + N)
2	*Seat Ring*	Burc	1.4301 + Stellite	8	*T Stud, Nut*	T Saplama, Somun	5.6/8
3	*Disc*	Klape	1.4301 + Stellite	9	*Spindle*	Mil	1.4021
4	*Disc Nut*	Baskı	Ms 58	10	*Gasket*	Conta	Klingerite/Grophite
5	*Bonnet*	Kapak	G-SC 25(GP240GH + N)	11	*Stud, Nut*	Saplama, Somun	5.6/8
6	*Packing*	Salmastra	Grophite	12	*Handwheel*	El Çarkı	GG 25

Nominal Diameter / Anma Çapı	DN	
Valve Dimensions / Vana Boyutları		LÜTFEN İLETİŞİME GEÇİNİZ *PLEASE ASK*

STRAIGHT SDNR GLOBE VALVE
DÜZ TİP KUMANDALI ÇEK VALF

VKCD-10-16-25-40

vis

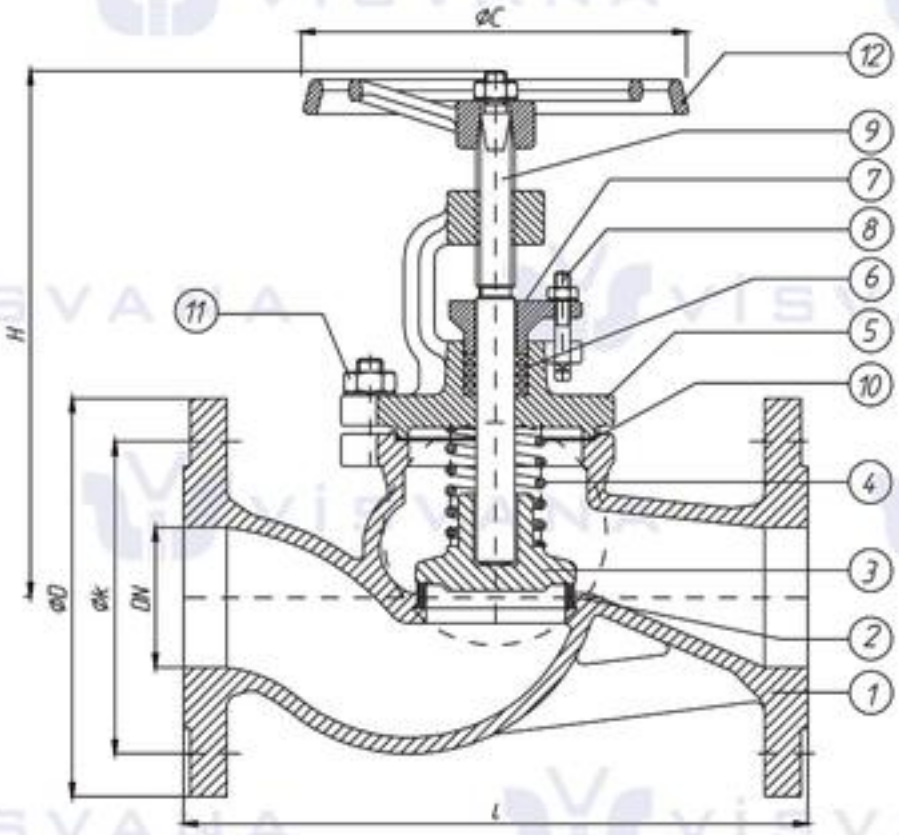

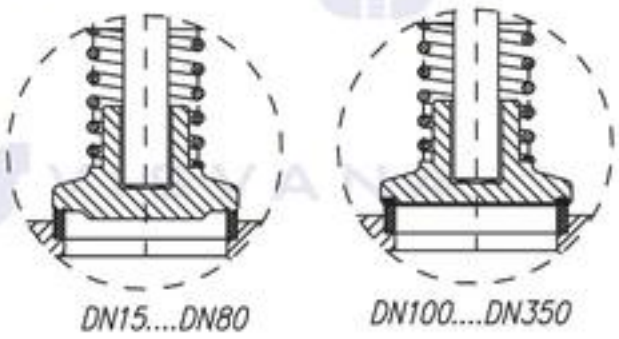

Design / Dizayn : DIN 3356
Face to Face / L Boyu : EN 558 Serie 1, DIN 3202 F1
Pressure / Basınç : PN 10 -16 - 25 - 40
Size Range / Ölçü Aralığı: DN15 - DN600
Flange Ends / Flanş: EN 1092-2/B
Tests / Testler : EN 12266

NO	PART NAME	PARÇA ADI	MATERIAL / MALZEME	NO	PART NAME	PARÇA ADI	MATERIAL / MALZEME
1	*Body*	Gövde	GG 25/GGG40/GGG40,3/GSC25/Bronze/ RG5/RG7/CuSn10/304/316/Dublex	7	*Gland*	Sal. Baskısı	GG 25/GGG40/GGG40,3/GSC25/Bronze/ RG5/RG7/CuSn10/304/316/Dublex
2	*Seat Ring*	Burc	304 / 316 / 13Cr / Bronze / RG5 / Dublex	8	*T Stud, Nut*	T Saplama, Somun	5.6/8
3	*Disc*	Klape	304 / 316 / 13Cr / Bronze / RG5 / Dublex	9	*Stem*	Mil	Ms-58 Brass
4	*Spring*	Yay	1.4301 SS	10	*Gasket*	Conta	Klingerite/Graphite
5	*Bonnet*	Kapak	GG 25/GGG40/GGG40,3/GSC25/Bronze/ RG5/RG7/CuSn10/304/316/Dublex	11	*Stud, Nut*	Saplama, Somun	5.6/8
6	*Packing*	Salmastra	Grophite	12	*Handwheel*	El Çarkı	GG 25

Nominal Diameter / Anma Çapı	DN	15	20	25	32	40	50	65	80	100	125	150	200	250	300	350	400	450	500	600
Valve Dimensions / Vana Boyutları DIN 3356/2 DIN EN 558-1	L	130	150	160	180	200	230	290	310	350	400	480	600	730	850	980	1100	1200	1250	1450
	ØC	120		140		160		180	200	225	250	285	320	400	460		640			
	H max.	185	185	195	205	230	240	275	290	350	410	430	525	630	700	760	840	915	980	1200
Flange Dimensions / Flanş Ölçüleri DIN EN 1092 PN 10	D	95	105	115	140	150	165	185	200	220	250	285	340	400	455	505	565	615	670	780
	k	65	75	85	100	110	125	145	160	180	210	240	295	350	400	460	515	565	620	725
	Øxn	Ø14x4			Ø18x4				Ø18x8			Ø22x8		Ø22x12		Ø22x16	Ø26x16	Ø26x20		Ø30x20
Weight / Ağırlık (~ for iron)	kg	3,6	4,25	5,15	6,75	9,60	12,0	16,4	23,2	33,0	55,0	87,5	130	204	280	370	505	705	915	1110
Flange Dimensions / Flanş Ölçüleri DIN EN 1092 PN 16	D	95	105	115	140	150	165	185	200	220	250	285	340	400	455	520	580	640	715	840
	k	65	75	85	100	110	125	145	160	180	210	240	295	355	410	470	525	585	650	770
	Øxn	Ø14x4			Ø18x4				Ø18x8			Ø22x8	Ø22x12	Ø26x12		Ø26x16	Ø30x16	Ø30x20	Ø33x20	Ø36x20
Weight / Ağırlık (~ for iron)	kg	3,6	4,25	5,15	6,75	9,60	12,0	16,4	23,2	33,0	55,0	87,5	136	212	290	380	515	715	925	1125
Flange Dimensions / Flanş Ölçüleri DIN EN 1092 PN 25	D	95	105	115	140	150	165	185	200	235	270	300	360	425	485	555	620	670	730	845
	k	65	75	85	100	110	125	145	160	190	220	250	310	370	430	490	550	600	660	770
	Øxn	Ø14x4			Ø18x4			Ø18x8		Ø22x8	Ø26x8		Ø26x12	Ø30x12	Ø30x16	Ø33x16	Ø36x16	Ø36x20		Ø39x20
Weight / Ağırlık (~ for iron)	kg	4	4,5	5,75	6,85	10,2	12,5	18,5	25,0	35,0	58,0	92,0	150	230	300	395	530	730	950	1150
Flange Dimensions / Flanş Ölçüleri DIN EN 1092 PN 40	D	95	105	115	140	150	165	185	200	235	270	300	375	450	515	580	660	685	755	890
	k	65	75	85	100	110	125	145	160	190	220	250	320	385	450	510	585	610	670	795
	Øxn	Ø14x4			Ø18x4			Ø18x8		Ø22x8	Ø26x8		Ø30x12	Ø33x12	Ø33x16	Ø36x16	Ø39x16	Ø39x20	Ø42x20	Ø48x20
Weight / Ağırlık (~ for iron)	kg	4,7	5,1	6,2	7,2	11,5	13,2	21,3	26,5	36,3	60,5	101	164	235	315	410	550	750	970	1200

VKCA-10-16-25-40

ANGLE TYPE SDNR GLOBE VALVE

KÖŞE TİP KUMANDALI ÇEK VALF

Design / Dizayn : DIN 3356
Center to Face / L Boyu : EN 558 Serie 8, DIN 3202 F32
Pressure / Basınç : PN 10 -16 - 25 - 40
Size Range / Ölçü Aralığı : DN15 - DN600
Flange Ends / Flanş : EN 1092-2/B
Tests / Testler : EN 12266

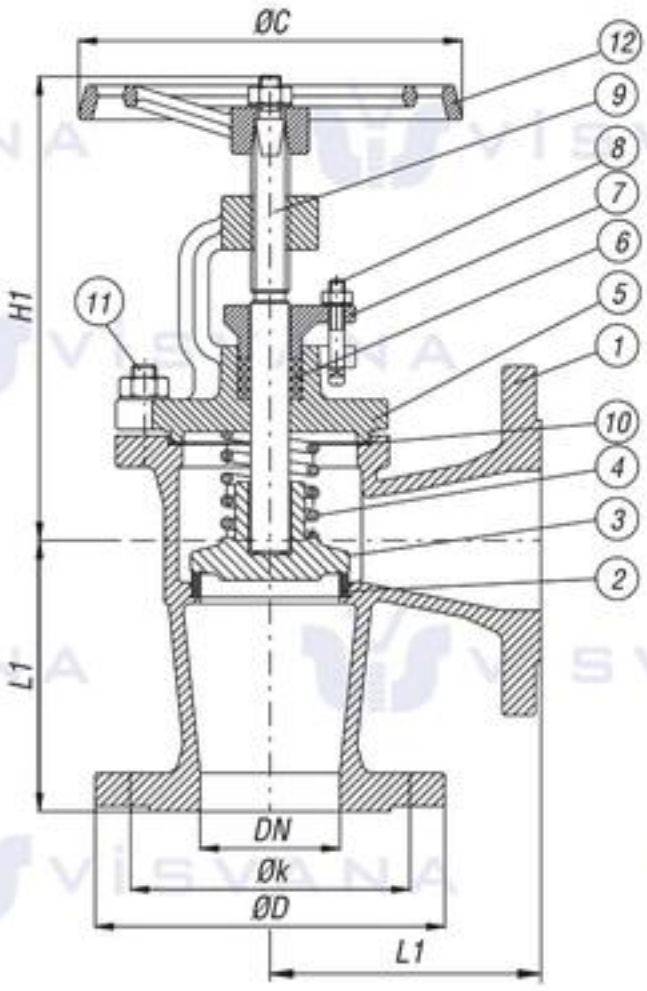

NO	PART NAME	PARÇA ADI	MATERIAL / MALZEME	NO	PART NAME	PARÇA ADI	MATERIAL / MALZEME
1	*Body*	Gövde	GG 25 / GGG40 / GGG40,3/GSC25/Bronze/ RG5/RG7/CuSn10/304/316/Dublex	7	*Gland*	Sal. Baskısı	GG 25 / GGG40 / GGG40,3/GSC25/Bronze/ RG5/RG7/CuSn10/304/316/Dublex
2	*Seat Ring*	Burc	304 / 316 / 13Cr / Bronze / RG5	8	*T Stud, Nut*	T Saplama, Somun	5.6/8
3	*Disc*	Klape	304 / 316 / 13Cr / Bronze / RG5	9	*Stem*	Mil	1.4021/Cu Sn8
4	*Spring*	Yay	1.4301	10	*Gasket*	Conta	Klingerite/Asberit
5	*Bonnet*	Kapak	GG 25 / GGG40 / GGG40,3/GSC25/Bronze/ RG5/RG7/CuSn10/304/316/Dublex	11	*Stud, Nut*	Saplama, Somun	5.6/8
				12	*Handwheel*	El Çarkı	GG 25
6	*Packing*	Salmastra	Graphite				

* Totally stainles steel or bronze disc are optional. ** Komple paslanmaz veya bronz disk opsiyoneldir.*

					PN16			PN40		
							Ağırlık kg			Ağırlık kg
DN	L1	H1	Strok	ØC	ØD	Øk	Açılı Angle	ØD	Øk	Açılı Angle
15	90	155	7	120	95	65	4	95	65	4
20	95	155	7	120	105	75	4	105	75	5
25	100	170	9	140	115	85	5	115	85	6
32	105	175	11	140	140	100	7	140	100	8
40	115	195	15	160	150	110	11	150	110	13
50	125	205	18	160	165	125	13	165	125	15
65	145	225	23	180	185	145	19	185	145	23
80	155	250	28	200	200	160	24	200	160	27
100	175	305	35	225	220	180	33	235	190	39
125	200	315	43	250	250	210	48	270	220	58
150	225	380	50	300	285	240	62	300	250	75
200	275	425	68	400	340	295	128	375	320	155
250	325	470	80	520	405	355	135	450	385	162
300	375	675	100	520	460	410	270	515	450	320

Not: DN600'a kadar üretimimiz vardır.
Note: We have production till DN600.

STRAIGHT AND ANGLE TYPE BELLOW SEALED GLOBE VALVE S. Form VBK-16 / A. Form VAK-16

KÖRÜKLÜ BUHAR VANASI

Düz Tip VBK-16 / Açılı Tip VAK-16

VAK-10-16-25-40

Design / Dizayn : DIN 3356
Face to Face / L Boyu : EN 558 Serie 1, DIN 3202 F1 (Straight Type)
Center to Face / L Boyu : EN 558 Serie 8, DIN 3202 F32 (Angle Type)
Pressure / Basınç : PN 10 -16 - 25 - 40
Size Range / Ölçü Aralığı: DN15 - DN600
Flange Ends / Flanş : EN 1092-2/B
Tests / Testler : EN 12266

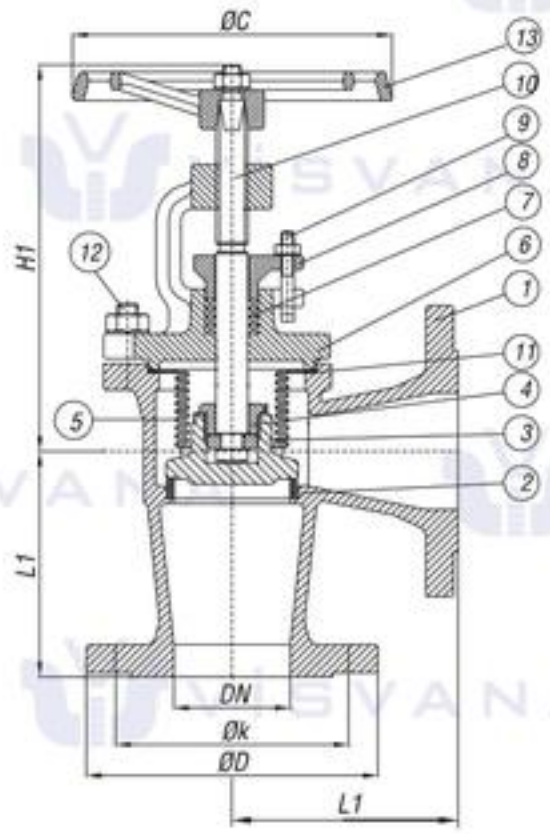

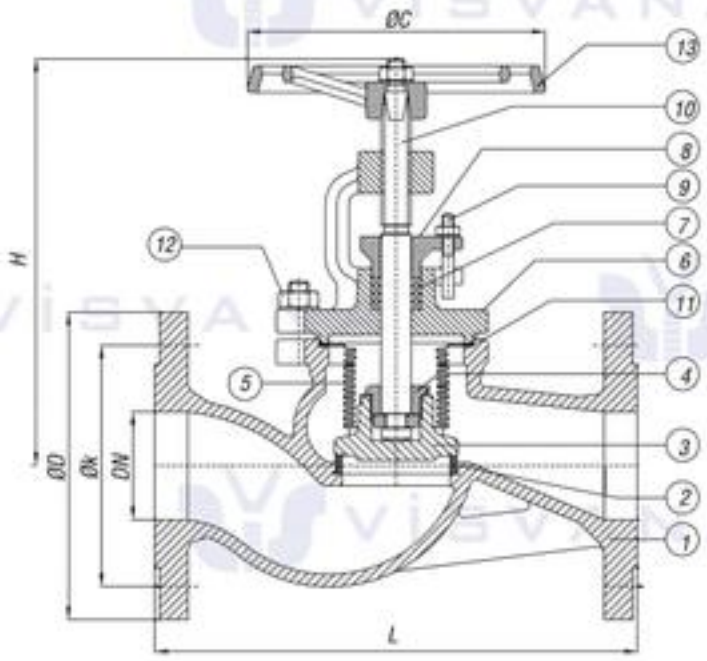

NO	PART NAME	PARÇA ADI	MATERIAL / MALZEME	NO	PART NAME	PARÇA ADI	MATERIAL / MALZEME
1	*Body*	Gövde	GG 25 / GGG-40 / GS-C 25	8	*Gland*	Sal. Baskısı	GG 25 / GGG-40 / GS-C 25
2	*Seat Ring*	Burc	1.4301	9	*T Stud, Nut*	T Saplama, Somun	5.6/8
3	*Disc*	Klape	1.4301	10	*Spindle*	Mil	1.4021
4	*Disc Nut*	Baskı	Ms 58	11	*Gasket*	Conta	Klingerite/Asberit
5	*Below Seat*	Körük	AISI 304	12	*Stud, Nut*	Saplama, Somun	5.6/8
6	*Bonnet*	Kapak	GG 25 / GGG-40 / GS-C 25	13	*Handwheel*	El Çarkı	GG 25
7	*Packing*	Salmastra	GG 25 / GGG-40 / GS-C 25				

							PN16				PN40			
									Ağırlık kg				Ağırlık kg	
DN	L	L1	H	H1	Strok	ØC	ØD	Øk	Düz Straight	Açılı Angle	ØD	Øk	Düz Straight	Açılı Angle
15	130	90	185	155	7	120	95	65	3,60	4	95	65	4,70	4
20	150	95	185	155	7	120	105	75	4,25	4	105	75	5,10	5
25	160	100	195	170	9	140	115	85	5,15	5	115	85	6,20	6
32	180	105	205	175	11	140	140	100	6,75	7	140	100	7,20	8
40	200	115	230	195	15	160	150	110	9,60	11,00	150	110	11,50	13,00
50	230	125	240	205	18	160	165	125	12,00	13,50	165	125	13,20	15,00
65	290	145	275	225	23	180	185	145	16,40	19,00	185	145	21,30	23,00
80	310	155	290	250	28	200	200	160	23,20	24,00	200	160	26,70	27,00
100	350	175	350	305	35	225	220	180	33,00	33,00	235	190	36,30	39,00
125	400	200	410	315	43	250	250	210	55,00	48,00	270	220	60,50	58,00
150	480	225	430	380	50	300	285	240	87,50	62,00	300	250	100,60	75,00
200	600	275	580	425	68	400	340	295	136,00	128,00	375	320	163,20	155,00
250	730	325	710	470	80	520	405	355	212,00	135,00	450	385	254,50	162,00
300	850	375	780	675	100	520	460	410	300,00	270,00	515	450	360,00	320,00

Not: DN600'a kadar üretimimiz vardır.
Note: We have production till DN600.

VDB-64

STRAIGHT TYPE CAST STEEL GLOBE VALVE

Düz Tip ÇELİK DÖKÜM GLOB VANA

Design / Dizayn : DIN 3356
Face to Face / L Boyu : EN 558 Serie 2, DIN 3202 F2
Pressure / Basınç : PN 64
Size Range / Ölçü Aralığı : DN15 - DN250
Flange Ends / Flanş : EN 1092-2/B
Tests / Testler : EN 12266

DN 15...DN 80

DN 100...DN 350

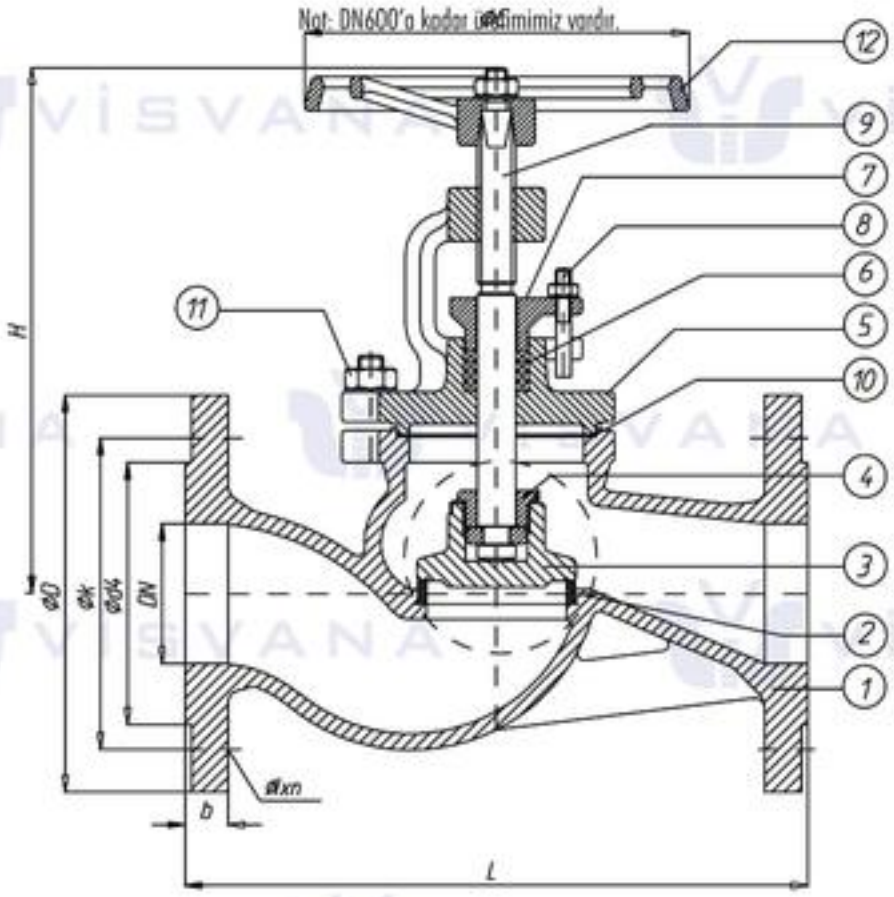

NO	PART NAME	PARÇA ADI	MATERIAL / MALZEME	NO	PART NAME	PARÇA ADI	MATERIAL / MALZEME
1	*Body*	Gövde	GS-C 25 (GP240GH+N)	7	*Gland*	Sal. Baskısı	GS-C 25 (GP240GH+N)
2	*Seat Ring*	Burc	AISI 304	8	*T Stud, Nut*	T Saplama, Somun	5.6/8
3	*Disc*	Klape	X20Cr13	9	*Stem*	Mil	X20Cr13
4	*Disc Nut*	Baskı	Brass, SS	10	*Gasket*	Conta	Klingerite/Asberit
5	*Bonnet*	Kapak	GS-C 25 (GP240GH+N)	11	*Stud, Nut*	Saplama, Somun	5.6/8
6	*Packing*	Salmastra	Graphite	12	*Handwheel*	El Çarkı	GG 25

Note : Kindly contact to technical department for high pressure and temperature applications.
Not : Özel çalışma basıncı ve sıcaklık şartları için alaşımlı çelik malzemelerden üretimimiz mevcuttur. Lütfen teknik birimle iletişime geçiniz.

Nominal Diameter / Anma Çapı	DN	15	20	25	32	40	50	65	80	100	125	150	200	250
Valve Dimensions / Vana Boyutları DIN 3356 DIN EN 558-2	L	210	230	230	260	260	300	340	380	430	500	550	650	775
	ØC	160			200			315		400	500			630
	H	230			310		315	420	485	550	625	630	860	900
	Strok max.	11			17		22	38	59	68	68	79	128	180
Flange Dimensions / Flanş Ölçüleri DIN EN 1092 PN 64	D	105	130	140	155	170	180	205	215	250	295	345	415	470
	k	75	90	100	110	125	135	160	170	200	240	280	345	400
	d4	45	58	68	78	88	102	122	138	162	188	218	285	345
	Øxn	Ø14x4	Ø18x4		Ø22x4			Ø22x8		Ø26x8	Ø30x8	Ø33x8	Ø36x12	
	b	20	24	24	26	28	26	26	28	30	34	36	42	46
Weight / Ağırlık (~ for iron)	kg	9,5	11	12,5	16,5	20,5	25	40	55	85	125	150	260	375

STRAIGHT TYPE CAST STEEL CONTROLLED CHECK VALVE (SDNR)

Düz Tip KUMANDALI ÇEK VALF (SDNR)

VKCD-64

Design / Dizayn : DIN 3356
Face to Face / L Boyu : EN 558 Serie 2, DIN 3202 F2
Pressure / Basınç : PN 64
Size Range / Ölçü Aralığı : DN15 - DN250
Flange Ends / Flanş : EN 1092-2/B
Tests / Testler : EN 12266

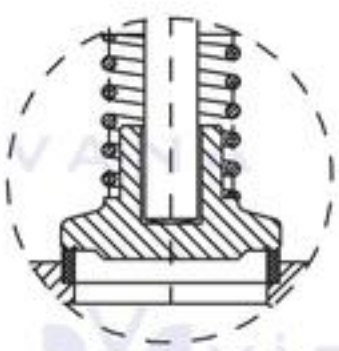

DN15....DN80

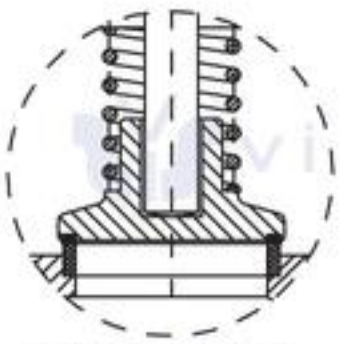

DN100....DN300

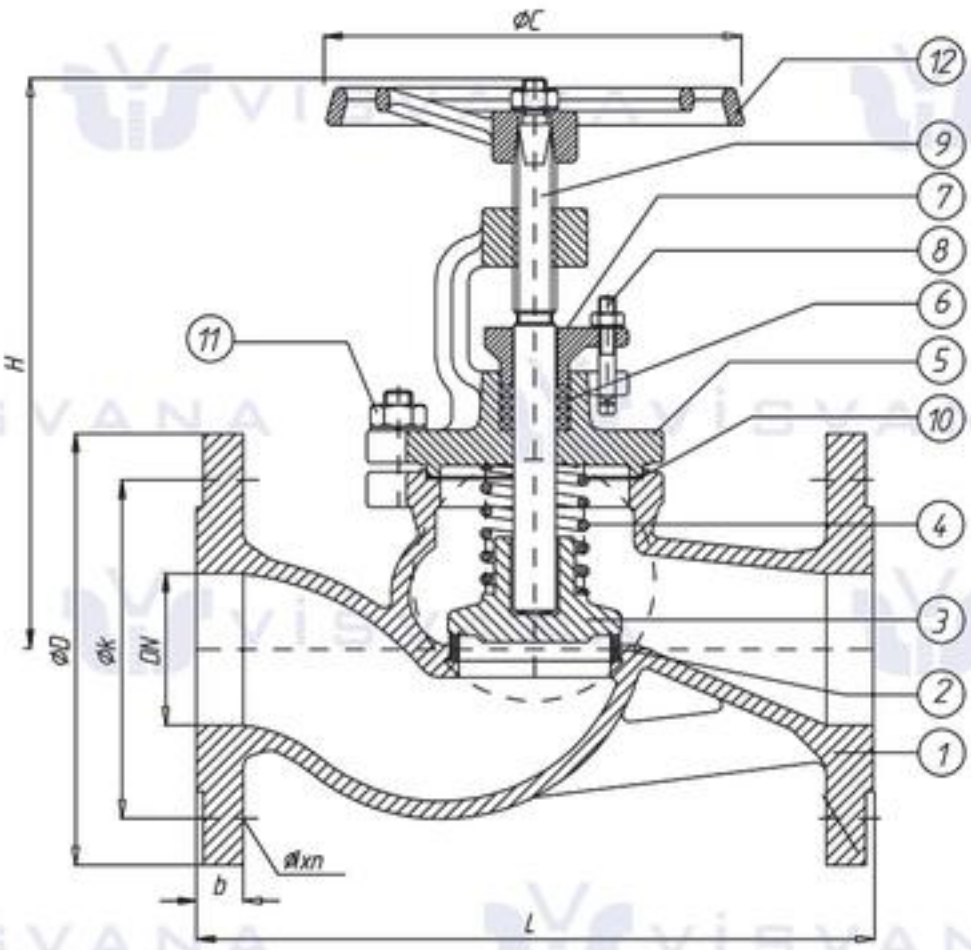

NO	PART NAME	PARÇA ADI	MATERIAL / MALZEME	NO	PART NAME	PARÇA ADI	MATERIAL / MALZEME
1	*Body*	Gövde	GS-C 25 (GP240GH+N)	7	*Gland*	Sal. Baskısı	GS-C 25 (GP240GH+N)
2	*Seat Ring*	Burc	AISI 304	8	*T.Stud, Nut*	T Saplama, Somun	5.6/8
3	*Disc*	Klape	X20Cr13	9	*Stem*	Mil	X20Cr13
4	*Spring*	Yay	AISI 304	10	*Gasket*	Conta	Klingerite/Asberit
5	*Bonnet*	Kapak	GS-C 25 (GP240GH+N)	11	*Stud, Nut*	Saplama, Somun	5.6/8
6	*Packing*	Salmastra	Graphite	12	*Handwheel*	El Çarkı	GG 25

Note : Kindly contact to technical department for high pressure and temperature applications.

Not : Özel çalışma basıncı ve sıcaklık şartları için alaşımlı çelik malzemelerden üretimimiz mevcuttur. Lütfen teknik birimle iletişime geçiniz.

Nominal Diameter / Anma Çapı	DN	15	20	25	32	40	50	65	80	100	125	150	200	250
Valve Dimensions / Vana Boyutları DIN 3356 DIN EN 558-2	L	210	230	230	260	260	300	340	380	430	500	550	650	775
	ØC	160			200			315		400	500			630
	H	230			310		315	420	485	550	625	630	860	900
	Strok max.	11			17		22	38	59	68	68	79	128	180
Flange Dimensions / Flanş Ölçüleri DIN EN 1092 PN 64	D	105	130	140	155	170	180	205	215	250	295	345	415	470
	k	75	90	100	110	125	135	160	170	200	240	280	345	400
	d4	45	58	68	78	88	102	122	138	162	188	218	285	345
	Øxn	Ø14x4	Ø18x4		Ø22x4			Ø22x8		Ø26x8	Ø30x8	Ø33x8	Ø36x12	
	b	20	24	24	26	28	26	26	28	30	34	36	42	46
Weight / Ağırlık (~ for iron)	kg	9,5	11	12,5	16,5	20,5	25	40	55	85	125	150	260	375

VYBC-100

Y TYPE CAST STEEL GLOBE VALVE

Y Tip ÇELİK DÖKÜM GLOB VANA

Design / Dizayn : DIN 3356
Face to Face / L Boyu : EN 558 Serie 1, DIN 3202 F1
Pressure / Basınç : PN 16-25-40-64-100
Size Range / Ölçü Aralığı : DN15 - DN300
Flange Ends / Flanş : EN 1092-2/B
Tests / Testler : EN 12266

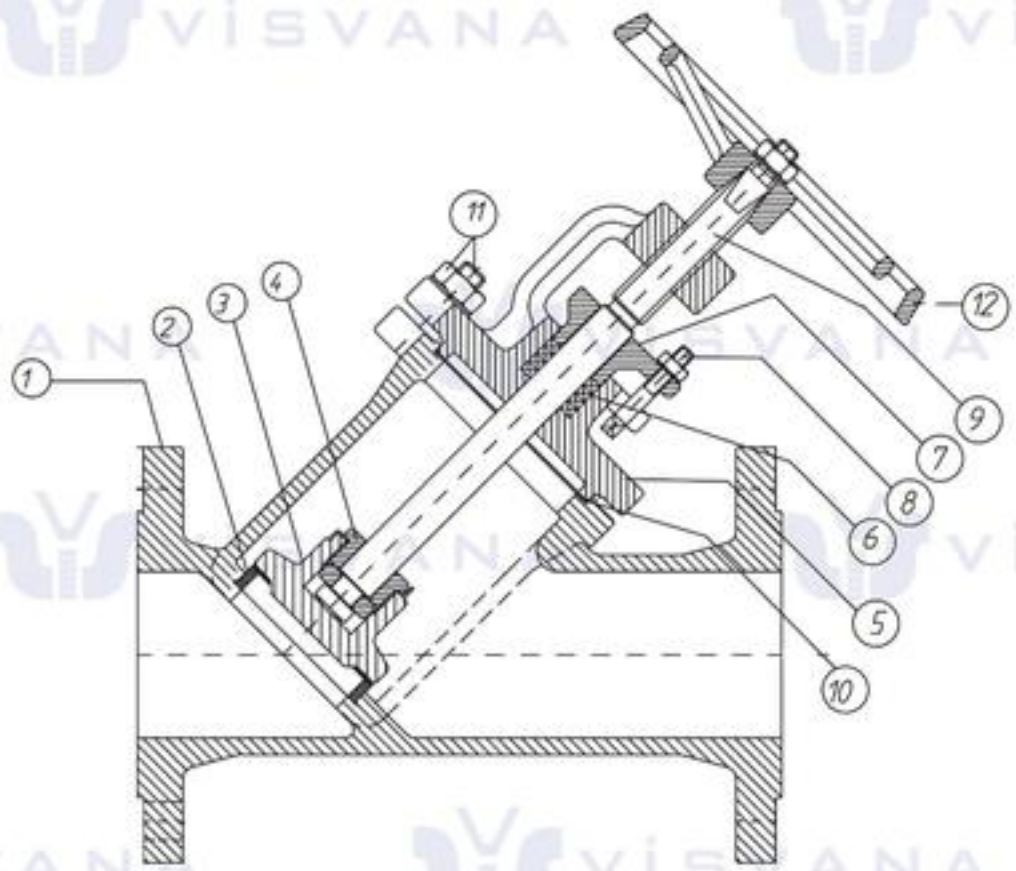

NO	PART NAME	PARÇA ADI	MATERIAL / MALZEME	NO	PART NAME	PARÇA ADI	MATERIAL / MALZEME
1	*Body*	Gövde	G-SC 25(GP240GH + N) + Stellite	7	*Gland*	Salm. Baskısı	G-SC 25(GP240GH + N)
2	*Seat Ring*	Burc	1.4301 + Stellite	8	*T Stud, Nut*	T Saplama, Somun	5.6/8
3	*Disc*	Klape	1.4301 + Stellite	9	*Spindle*	Mil	1.4021
4	*Disc Nut*	Baskı	Ms 58	10	*Gasket*	Conta	Klingerite/Graphite
5	*Bonnet*	Kapak	G-SC 25(GP240GH + N)	11	*Stud, Nut*	Saplama, Somun	5.6/8
6	*Packing*	Salmastra	Graphite	12	*Handwheel*	El Çarkı	GG 25

Nominal Diameter / Anma Çapı	DN	
Valve Dimensions / Vana Boyutları		LÜTFEN İLETİŞİME GEÇİNİZ *PLEASE ASK*

GLOB VANALAR

GLOBE VALVES

Pnömatik Aktüatörlü Glob Vana

Pneumatic Operated Globe Valve

Çift Etkili Hidrolik Aktüatörlü Glob Vana

Double Acting Hydraulic Actuator Operated Globe Valve

Çok Turlu Hidrolik Aktüatörlü Glob Vana

Multiturn Hydr. Actuator Operated Globe Valve

* Çeşitli kumanda tiplerine uygun glob vana imalatlarımız mevcuttur.


VIS
40
300LB
WCB
D362


VIS
DN250
PN16
GG25


VIS
4
1500
WCB

Check Valves

Çekvalfler

Products & Technical Data

Teknik Bilgiler

www.visvana.com

VDBC-16
VABC-16

LIFT TYPE CHECK VALVE
Straight form VDBC-16
Angle form VABC-16

YAYLI ÇEK VALF

Düz tip VDBC-16 Açılı tip VABC-16

Design / Dizayn : DIN 3356
Face to Face / L Boyu : EN 558 Serie 1, DIN 3202 F1 (Straight Type)
Center to Face / L Boyu : EN 558 Serie 8, DIN 3202 F32 (Angle Type)
Pressure / Basınç : PN 10-16-25-40
Size Range / Ölçü Aralığı : DN15 - DN600
Flange Ends / Flanş : EN 1092-2/B
Tests / Testler : EN 12266

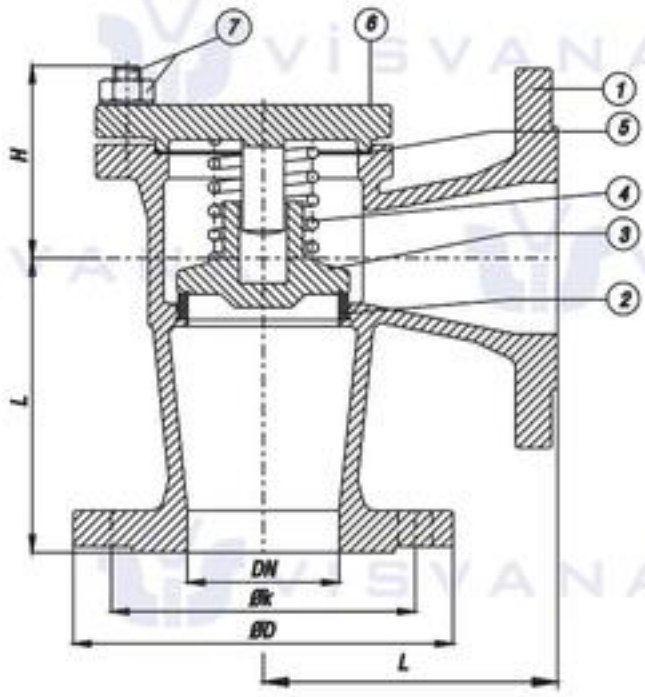

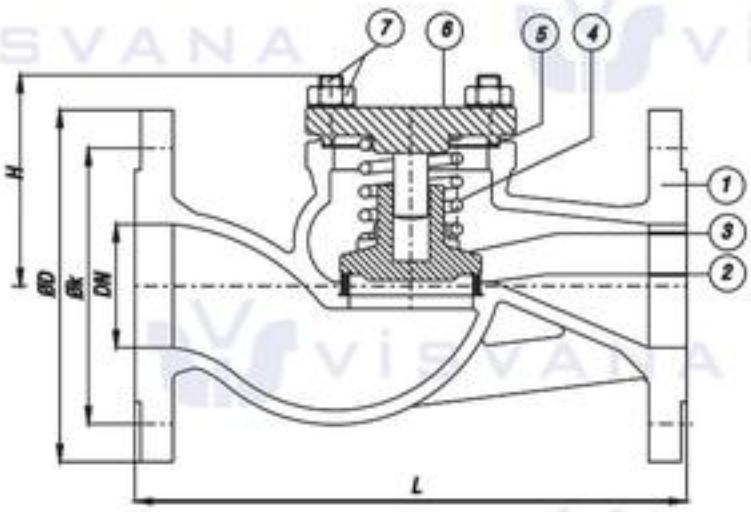

NO	PART NAME	PARÇA ADI	MATERIAL / MALZEME
1	*Body*	Gövde	GG 25 / GGG-40 / GSC 25 / Bronze RG5 / RG7 / CuSn10 / 304 / 316 / Duplex
2	*Seat Ring*	Burc	AISI 304, 316 / Bronze RG6 / RG7 / CuSn10
3	*Disc*	Klape	AISI 304, 316 / Bronze RG6 / RG7 / CuSn10
4	*Spring*	Yay	1.4310
5	*Gasket*	Conta	Kingerite
6	*Bonnet*	Kapak	GG 25 / GGG-40 / GSC 25 / Bronze RG5 / RG7 / CuSn10 / 304 / 316 / Duplex
7	*Stud, Nut*	Saplama, Somun	5.6/8

Straight Form Düz Tip			PN16			PN40		
DN	L	H	ØD	Øk	Ağırlık kg	ØD	Øk	Ağırlık kg
15	130	75	95	65	3	95	65	3,5
20	150	75	105	75	3,5	105	75	4
25	160	85	115	85	4,5	115	85	5,5
32	180	90	140	100	6,5	140	100	8
40	200	95	150	110	9	150	110	11
50	230	100	165	125	11,5	165	125	14
65	290	130	185	145	16,5	185	145	20
80	310	135	200	160	24	200	160	31
100	350	170	220	180	34	235	190	41
125	400	205	250	210	54	270	220	65
150	480	225	285	240	76	300	250	91
200	600	270	340	295	135	375	320	162
250	730	290	405	355	260	450	385	312
300	850	360	460	410	320	515	450	430
350	980	460	520	470	370	580	510	490

Angle Form Açılı Tip			PN16			PN40		
DN	L	H	ØD	Øk	Ağırlık kg	ØD	Øk	Ağırlık kg
15	90	55	95	65	3	95	65	4,5
20	95	55	105	75	3,5	105	75	5
25	100	65	115	85	4	115	85	6
32	105	70	140	100	6	140	100	8
40	115	85	150	110	8	150	110	10
50	125	90	165	125	10	165	125	12
65	145	100	185	145	14	185	145	25
80	155	105	200	160	19	200	160	28
100	175	120	220	180	25	235	190	40
125	200	145	250	210	45	270	220	55
150	225	150	285	240	65	300	250	85
200	275	185	340	295	110	375	320	145
250	325	190	405	355	140	450	385	180
300	375	240	460	410	250	515	450	300
350	425	325	520	470	320	580	510	400

Not: DN600'a kadar üretimimiz vardır. Note: We have production till DN600.

SWING CHECK VALVE
ÇALPARA ÇEK VALF

VCCV-10-16-25-40

Pressure / Basınç : MAX. PN 40
Size Range / Ölçü Aralığı : DN15 - DN1200
Temperature / Sıcaklık : -10....+120 oC
Face to Face / L Boyu : EN 558 Serie 48, DIN 3202 F6
Flange Ends / Flanş : EN 1092-2/B
Tests / Testler : EN 12266 & API 598

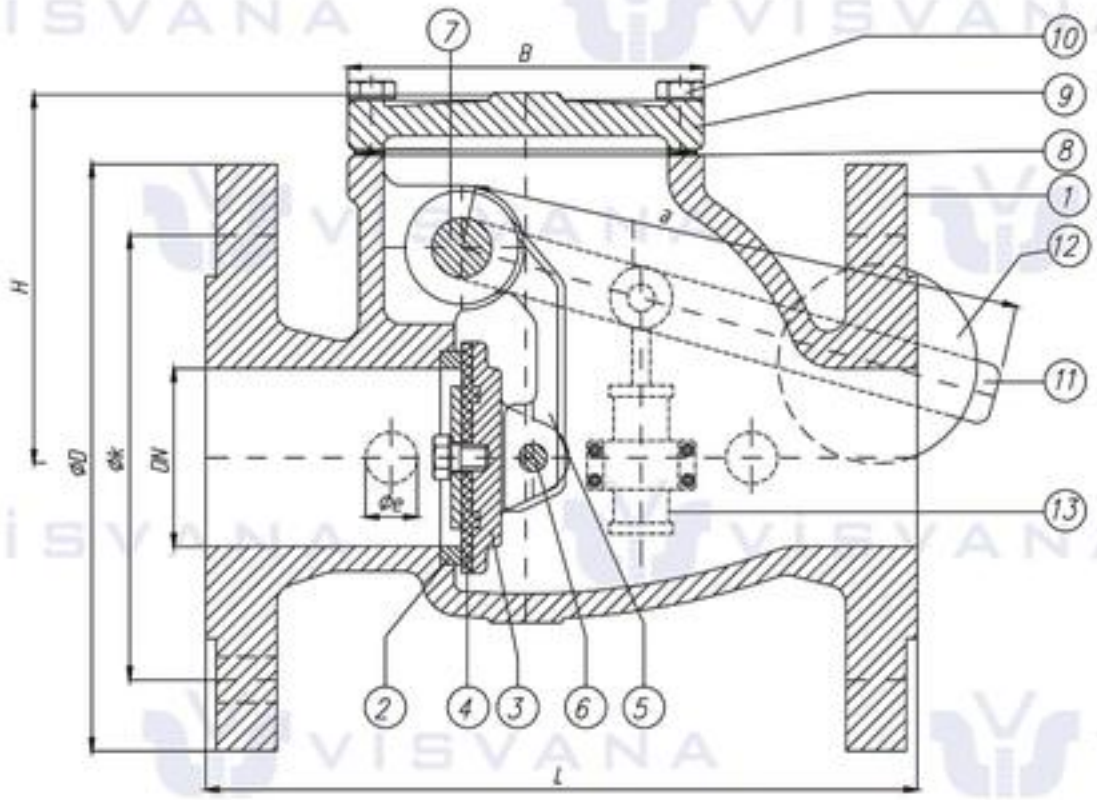

3
Check Valves

NO	PART NAME	PARÇA ADI	MATERIAL / MALZEME	NO	PART NAME	PARÇA ADI	MATERIAL / MALZEME
1	*Body*	Gövde	GG 25 / GGG-40 / GS-C 25	8	*Gasket*	Conta	EPDM / Klingerit
2	*Body Seat*	Gövde Burcu	Ms 58 / SS / Bronze	9	*Bonnet*	Kapak	GG 25 / GGG-40 / GS-C 25
3	*Disc*	Klape	GG 25 / GGG-40 / GS-C 25	10	*Bolt*	Civata	5.6 A2 / A4
4	*Disc Seat*	Klape Burcu	EPDM / SS / Bronze / Brass	11	*Lever*	Kol	GGG 40 / 50
5	*Disc Arm*	Klape Kolu	GGG 40/50	12	*Weight*	Kol Ağırlığı	GG 20
6	*Pin*	Pim	Ms 58 / SS / Bronze	13	*Hyd. Piston*	El Çarkı	
7	*Stem*	Mil	Ms 58 / SS / Bronze				

* Kol ağırlık ve hidrolik damper opsiyoneldir. * *Counter weight and hydraulic damper are optional.*

Nominal Pressure / Anma Basıncı	PN	PN 10 / 16 / 25 / 40															PN 10 / 16 / 25					PN 10 / 16	
Nominal Diameter / Anma Çapı	DN	40	50	65	80	100	125	150	200	250	300	350	400	450	500	600	700	800	900	1000	1200		
Valve Dimensions / Vana Boyutları TS 457/1 DIN3202/2-F6	L	180	200	240	260	300	350	400	500	600	700	800	900	1000	1100	1300	1500	1700	1900	2100	2500		
	H	100	110	130	145	170	195	205	260	340	370	400	450	500	630	700	800	900	1000	1100	1300		
	B	Ø112		Ø152	Ø158		Ø240	Ø275	Ø336	Ø400	Ø450	Ø500	Ø550	Ø600	Ø740	Ø820	Ø1000	Ø1100	Ø1200	Ø1400	Ø1650		
DIN EN 558-1/48	a	200		300			400		600			800			1100		1200						
By-pass	Øe	Ø15							Ø25			Ø40			Ø50	Ø65		Ø80	Ø100		Ø125		
Flange Dimensions / Flanş Ölçüleri DIN EN 1092-1-2 PN 10	D	150	165	185	200	220	250	285	340	395	445	505	565	615	670	780	895	1015	1115	1230	1455		
	k	110	125	145	160	180	210	240	295	350	295	460	515	565	620	725	840	950	1050	1160	1380		
Flange Dimensions / Flanş Ölçüleri DIN EN 1092-1-2 PN 16	D	150	165	185	200	220	250	285	340	405	460	520	580	640	715	840	910	1025	1125	1255	1485		
	k	110	125	145	160	180	210	240	295	355	410	470	525	585	650	770	840	950	1050	1170	1390		
Flange Dimensions / Flanş Ölçüleri DIN EN 1092-1-2 PN 25	D	150	165	185	200	235	270	300	360	425	485	555	620	670	730	845	960	1085	1185	1320	1530		
	k	110	125	145	160	190	220	250	310	370	430	490	550	600	660	770	875	990	1090	1210	1420		
Flange Dimensions / Flanş Ölçüleri DIN EN 1092-1-2 PN 40	D	150	165	185	200	235	270	300	375	450	515	580	660	685	755	890	995	1140	1250	1360	1575		
	k	110	125	145	160	190	220	250	320	385	450	510	585	610	670	795	900	1030	1140	1250	1460		

VWCV-10-16-25-40

WAFER CHECK VALVE
WAFER ÇEK VALF

Sandwhich Type / Flanş Arası
Pressure Rate / Basınç Aralığı: PN 10-16-25
Flange Ends / Flanş: DIN 2501
Nominal Diameter / Anma Çapı: DN 40.....800

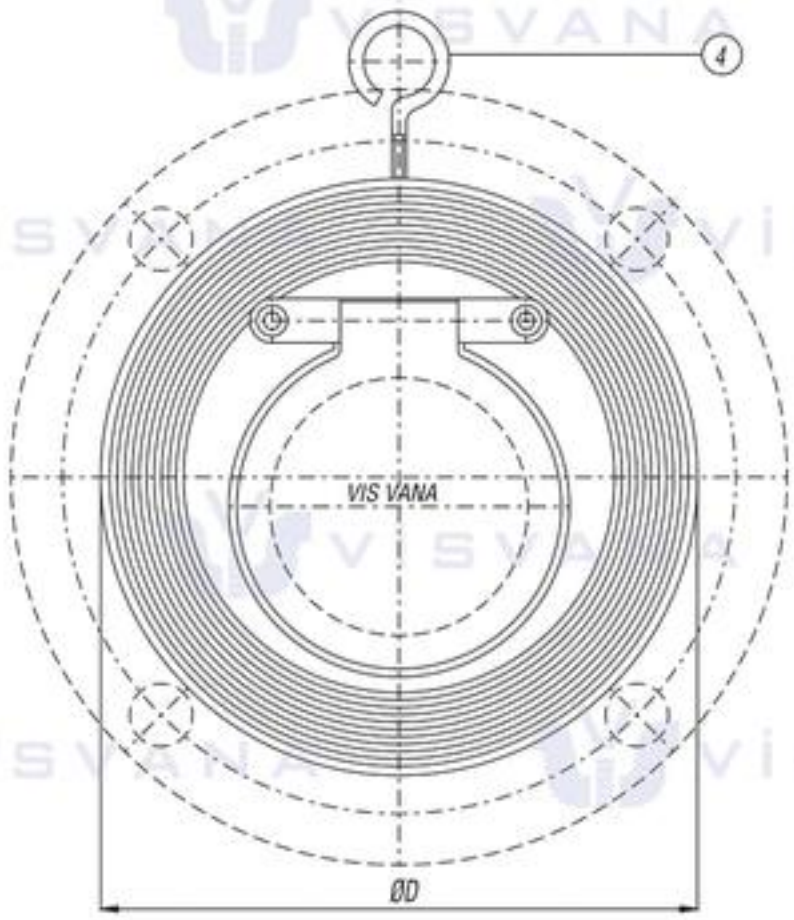

NO	PART NAME	PARÇA ADI	MATERIAL / MALZEME
1	Body	Gövde	GG25/GGG40/St37/304, 316/Bronze RG5/CuSn10
2	Body Seal	Gövde Ringi	EPDM / Viton / AISI 316 / Bronze
3	Disc	Klape	AISI 304 / AISI 316 / Bronze
4	Ring Bolt	Taşıma Halkası	St-Zn

Nominal Diameter Anma Çapı DN	ØD						Weight Ağırlık kg
				Nominal Pressure / Anma Basıncı			
	Ød	L	b	PN 10	PN 16	PN 25	
40	20	30,5	16	92		92	0,80
50	32	41,5		107		107	1,00
65	38	51,5		127		127	1,30
80	52	62	18	142		142	1,50
100	70	92		170		170	2,20
125	87	104	22	196		196	3,60
150	110	129		226		226	5,30
200	154	172		286		286	11,00
250	190	212	32	329	331	343	16,00
300	236	263	38	380	386	403	28,00
350	265	258		440	446	460	37,00
400	290	300	44	491	498	517	55,00
450	330	330		541	558	567	66,00
500	368	368	58	596	620	627	107,00
600	435	435	68	608	737	734	158,00
700	550	540	76	813	807	836	235,00
800	650	640	89	920	914	945	364,00

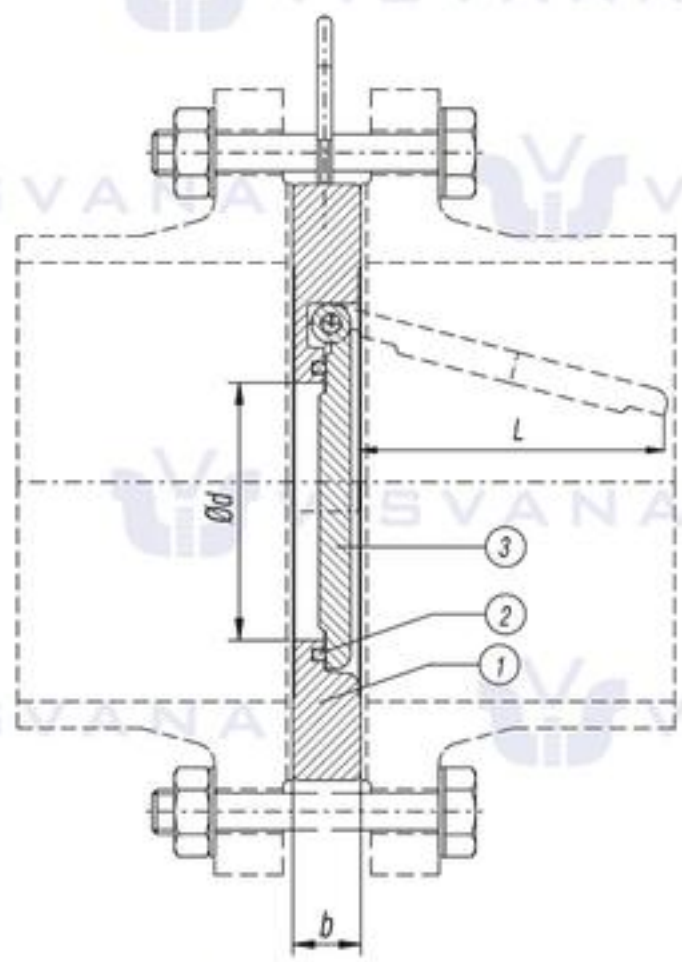

TILTING TYPE CHECK VALVE
TİLTİNG ÇEK VALF

VTCV-16

Pressure Rate / Basınç Aralığı : PN 10 -16 - 25 - 40
Size Range / Ölçü Aralığı: DN100 - DN1400
Temperature / Sıcaklık : -10....+120 °C
Face to Face / L Boyu : EN 558 Serie 14, DIN 3202 F4
Face to Face / L Boyu : EN 558 Serie 13, BS 5155
Flange Ends / Flanş : EN 1092-2/B
Tests / Testler : EN 12266 & API 598

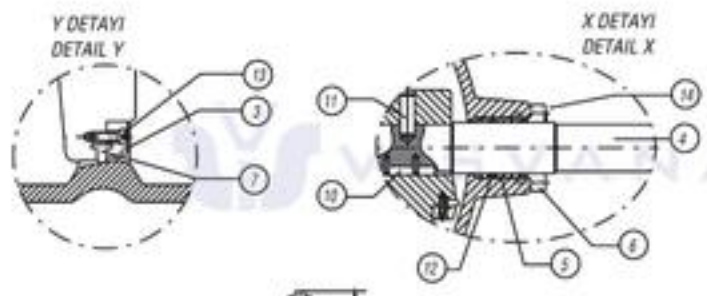

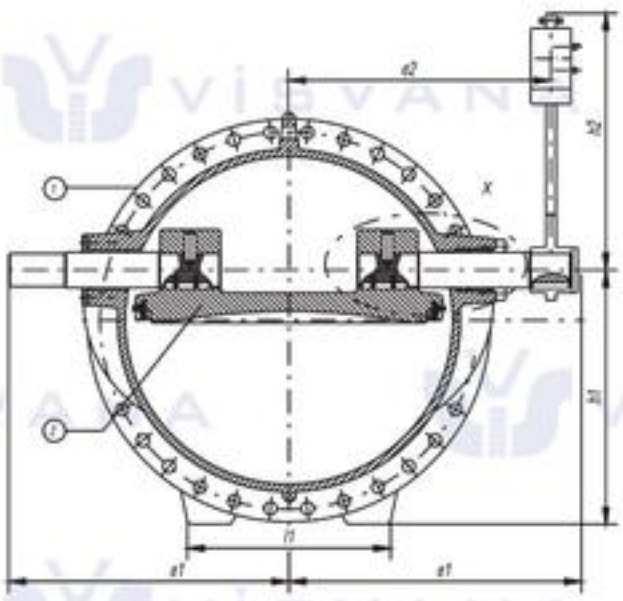

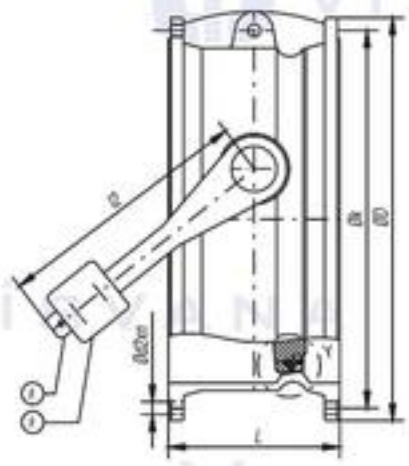

NO	PART NAME	PARÇA ADI	MATERIAL / MALZEME	NO	PART NAME	PARÇA ADI	MATERIAL / MALZEME
1	Body	Gövde	GGG 40/50 / GSC25 / 304, 316	8	Lever	Kol	Steel St-37
2	Disc	Klape	GGG 40/50 / GSC25 / 304, 316	9	Weight	Ağırlık	GG-25
3	Retainig Ring	Baskı Çemberi	St37 / 304, 316	10	Key	Kama	Steel Ck-45
4	Stem-Driven End	Tahrik Mili	AISI 420(X20Crt13) / 304, 316	11	Setscrew	Setskur	Stainless Steel-A2
5	Bearing Bush	Yatak burcu	Delrin, PTFE	12	O-Ring	O-Ring	EPDM, BUNA-N
6	Cover-Drivend End	Mil Kapağı	GGG 40/50 / GSC25 / 304, 316	13	Screw	İmbus Civata	Stainless Steel-A2
7	Sealing Ring	Sızdırmazlık Ringi	EPDM	14	Bolt	Civata	5.6

Nominal Diameter / Anma Çapı		DN	PN 10/16/25/40																
			100	125	150	200	250	300	350	400	450	500	600	700	800	900	1000	1200	1400
Valve Dimensions / Vana Boyutları	DIN 3202 F4	L	190	200	210	230	250	270	290	310	330	350	390	430	470	510	550	630	710
	BS 5155	L	127	140	140	152	165	178	190	216	222	229	267	292	318	330	410	470	530
		e1	192	215	238	263	313	326	388	418	470	495	592	688	715	825	832	1000	1246
		e2	160	183	206	231	276	289	346	376	420	453	540	623	656	740	764	900	1100
		h1	135	156	180	220	265	305	357	395	440	490	580	635	713	795	890	1042	1200
		h2	189				280		372		405	460	555	642	735	830	920	1087	1280
		l1	200				300		400		450	500	600	700	800	900	1000	1200	1400
		l2	220	250	285	340	260	335	345	375	450	470	545	590	660	720	770	965	965
Flange Dimensions / Flanş Ölçüleri DIN EN 1092-1-2	PN 10	ØD	220	250	285	340	395	445	505	565	615	670	780	895	1015	1115	1230	1455	1675
		Øk	180	210	240	295	350	400	460	515	565	620	725	840	950	1050	1160	1380	1590
		Ød2Xn	Ø18x8		Ø22x8		Ø22x12		Ø22x16	Ø26x16	Ø26x20		Ø30x20	Ø30x24	Ø33x24	Ø33x28	Ø36x28	Ø41x32	Ø44x36
	PN 16	ØD	220	250	285	340	405	460	520	580	640	715	840	910	1025	1125	1255	1485	1685
		Øk	180	210	240	295	355	410	470	525	585	650	770	840	950	1050	1170	1380	1590
		Ød2Xn	Ø18x8		Ø22x8	Ø22x12	Ø26x12		Ø26x16	Ø30x16	Ø30x20	Ø33x20	Ø36x20	Ø36x24	Ø39x24	Ø39x28	Ø42x28	Ø50x32	Ø50x36
	PN 25	ØD	235	270	300	360	425	485	555	620	670	730	845	960	1085	1185	1320	1530	1755
		Øk	190	220	250	310	370	430	490	550	600	660	770	875	990	1090	1210	1420	1640
		Ød2Xn	Ø22x8	Ø26x8		Ø26x12	Ø30x12	Ø30x16	Ø33x16	Ø36x16	Ø36x20		Ø39x20	Ø42x24	Ø48x24	Ø48x28	Ø56x28	Ø57x32	Ø62x36
	PN 40	ØD	235	270	300	375	450	515	580	660	685	755	890	995	1140	1250	1360	1575	1795
		Øk	190	220	250	320	385	450	510	585	610	670	795	900	1030	1140	1250	1460	1680
		Ød2Xn	Ø22x8	Ø26x8		Ø30x12	Ø33x12	Ø33x16	Ø36x16	Ø39x16	Ø39x20	Ø42x20	Ø48x20	Ø48x24	Ø56x24	Ø56x28		Ø62x32	Ø62x36

VWTD-10-16-25

WAFER TILTING DISC CHECK VALVE

WAFER TİLTİNG DİSK ÇEK VALF

Pressure Rate / Basınç Aralığı : PN 10 -16 - 25
Size Range / Ölçü Aralığı: DN40 - DN1000
Temperature / Sıcaklık : -10....+120 °C
Face to Face / L Boyu : EN 558 Serie 16, DIN 3202-K3
Flange Ends / Flanş : EN 1092-2/B
Tests / Testler : EN 12266 & API 598

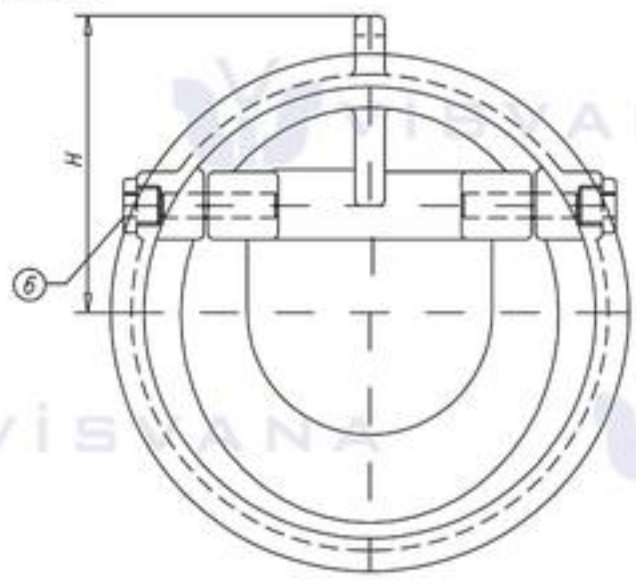

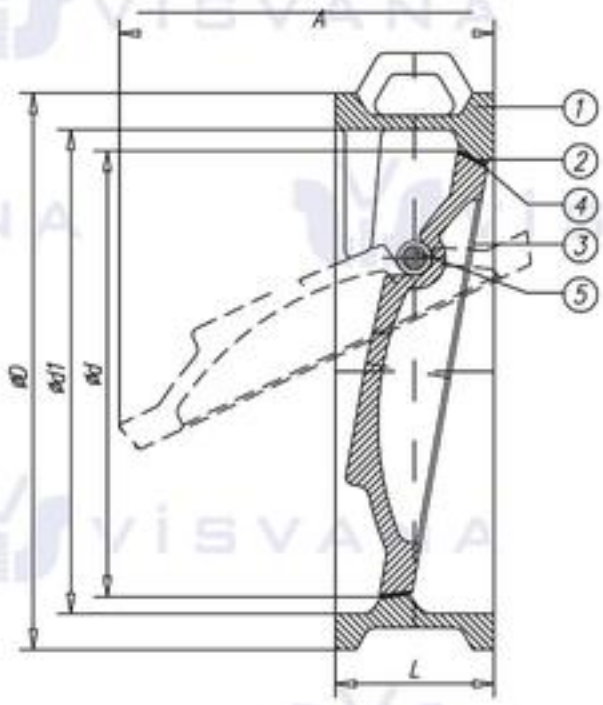

NO	PART NAME	PARÇA ADI	MATERIAL / MALZEME
1	*Body*	Gövde	GG 25 / GS-C 25/AISI 304/316 / Bronze
2	*Body Seat*	Gövde Siti	Welded 13 Cr, Stellite 6 or 21
3	*Disc*	Klape	AISI 304 -316 / Bronze / Cast Steel
4	*Disc Seat*	Klape Siti	Welded 13 Cr, Stellite 6 or 21
5	*Stem*	Mil	AISI 304 -316
6	*Plug*	Tapa	AISI 304 -316

Nominal Diameter Anma Çapı DN	Ød	Ød1	ØA	H	L	ØD Nominal Pressure / Anma Basıncı PN 10	PN 16	PN 25
40	34	40	45		33	94		94
50	44	50	54		43	109		109
65	58	65	64		46	129		129
80	72	80	85		64	144		144
100	90	100	95		64	164		164
125	112	125	115		70	194		194
150	135	150	135		76	220		220
200	180	200	220	155	89	275		284
250	225	250	220	182	114	330	330	343
300	270	300	250	210	114	380	386	403
350	315	350	295	240	127	440	446	460
400	365	400	340	275	140	491	498	515
450	410	450	370	300	152	541	558	565
500	460	500	405	325	152	596	620	625
600	555	600	500	390	178	698	735	732
700	650	700	616	460	229	808	808	834
800	745	800	670	515	241	915	915	942
900	835	900	750	562	241	1018	1112	1042
1000	930	1000	760	625	300	1125	1130	1155

NOZZLE (SILENT) CHECK VALVE

NOZUL (DİK) ÇEK VALF

VDCV 10-16-25-40

Pressure Rate / Basınç Aralığı : PN 10 -16 -25 -40
Size Range / Ölçü Aralığı: DN40 - DN500
Flange Ends / Flanş : EN 1092, BS 4504
Tests / Testler : EN 12266 & API 598

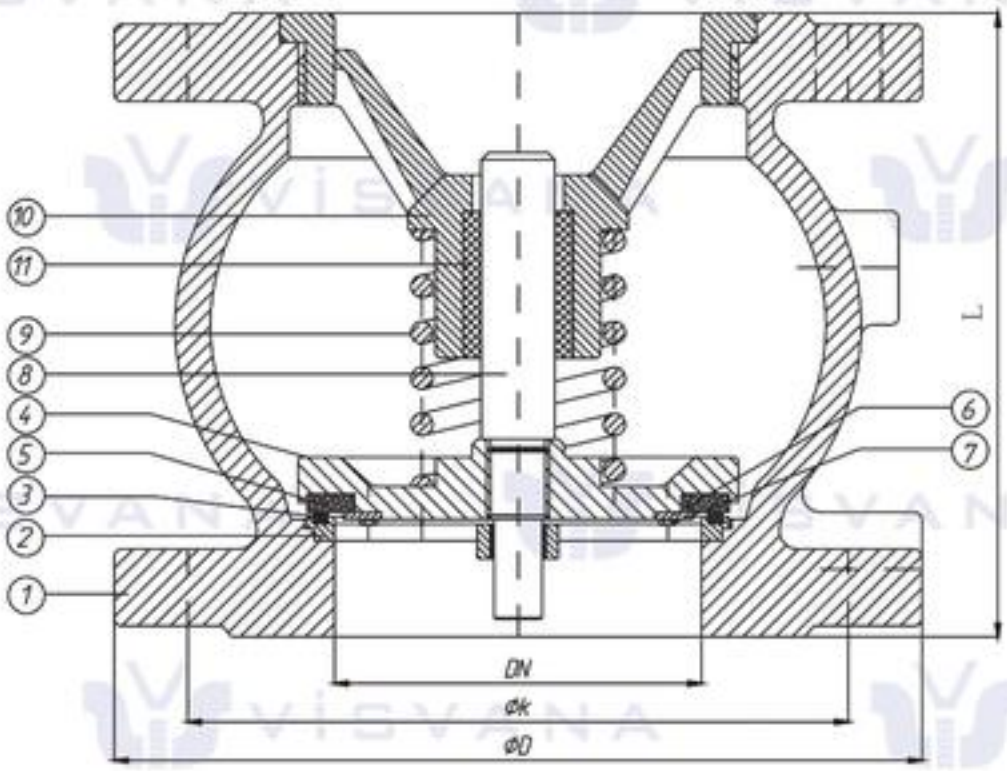

Note: 6" Class 300 A351 CF8M NOZZLE CHECK VALVE

LEAKAGE TEST EN 12266-A		
PN	Disc test x 1,1	Body test x 1,5
PN 10	11 Bar	15 Bar
PN 16	18 Bar	24 Bar
PN 25	28 Bar	38 Bar
PN 40	44 Bar	60 Bar

NO	PART NAME	PARÇA ADI	MATERIAL / MALZEME	NO	PART NAME	PARÇA ADI	MATERIAL / MALZEME
1	Body	Gövde	GG25 / GGG-40 / GS-C 25 / SS 304 / 316	7	Plate	Conta Sacı	St, SS
2	Lower Guide	Alt Kayıt	GG25 / GGG-40 / GS-C 25 / SS 304 / 316	8	Stem	Mil	Brass / SS
3	Seat	Burc	Brass / Bronze / SS	9	Spring	Yay	SS
4	Disc	Klape	GG-25 / GGG-40 / GS-C 25 / Bronze / SS	10	Upper Guide	Üst Kayıt	GG25 / GGG-40 / GS-C 25 / SS 304 / 316
5	Seal	Conta	EPDM / NBR / Teflon / Bronze / SS	11	Bush	Burc	Brass / Bronze / Teflon
6	Bolt	Civata	St, SS				

Nominal Pressure / Anma Basıncı		PN10					PN16							
Nominal Diameter / Anma Çapı	DN	40	50	65	80	100	125	150	200	250	300	350	400	500
Valve Dimensions / Vana Boyutları	L	85	100	120	140	170	200	230	288	354	395	472	560	670
Flange Dimensions / Flanş Ölçüleri DIN EN 1092 PN 10	D	150	165	185	200	220	250	285	340	400	455	505	565	670
	k	110	125	145	160	180	210	240	295	350	400	460	515	620
Flange Dimensions / Flanş Ölçüleri DIN EN 1092 PN 16	D	150	165	185	200	220	250	285	340	400	455	520	580	715
	k	110	125	145	160	180	210	240	295	355	410	470	525	650

VDTC-16

THREADED BALL CHECK VALVE

DİŞLİ TOPLU ÇEK VALF

Pressure Rate / Basınç Aralığı: PN 16
End: EN 10226 Threaded

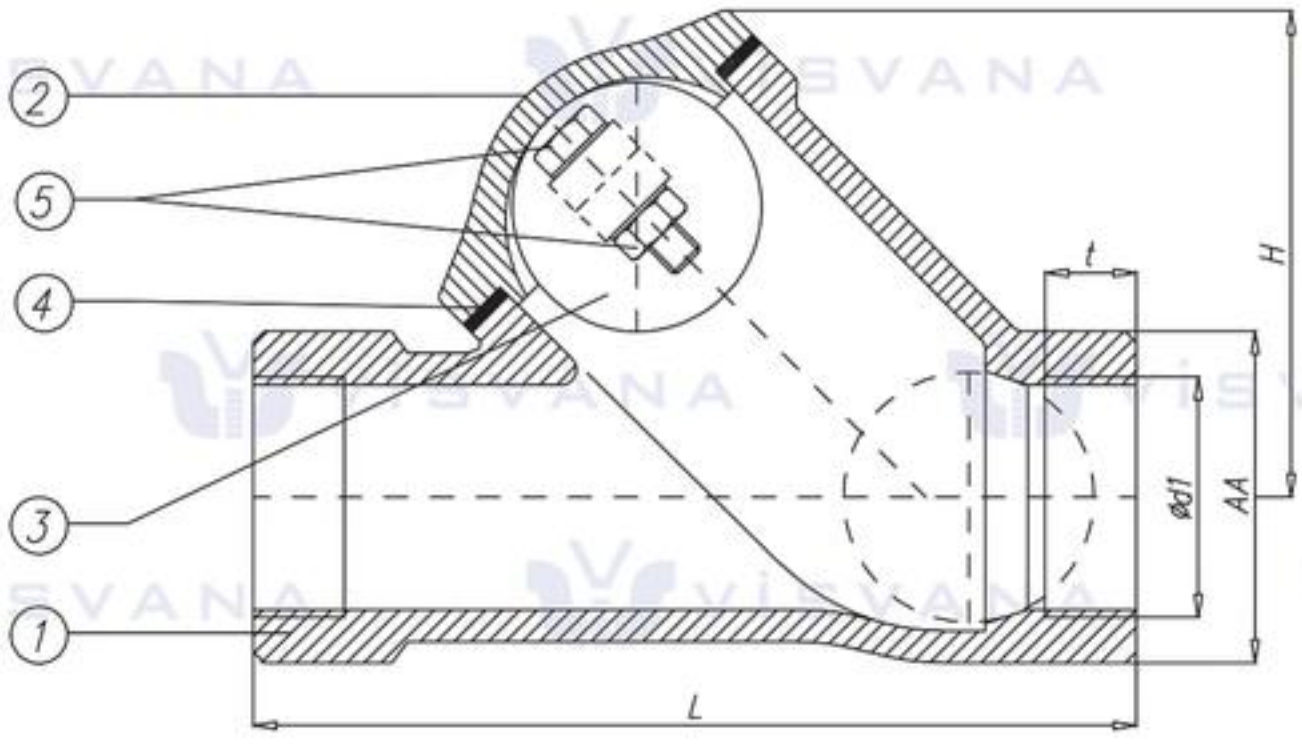

NO	PART NAME	PARÇA ADI	MATERIAL / MALZEME
1	Body	Gövde	GG 25 / GGG 40
2	Bonnet	Kapak	GG 25 / GGG 40
3	Ball	Top	EPDM
4	Gasket	Conta	EPDM
5	Bolt / Nut	Civata/Somun	8,8 / 8

Nominal Pressure / Anma Basıncı	PN16					
Nominal Diameter / Anma Çapı	DN	25	32	40	50	65
Valve Dimensions / Vana Boyutları	L	125	135	151	175	202
	H	80	85	105	125	135
Thread Dimensions / Diş Ölçüleri DIN EN 10226-1 PN 16	Ød1	1"	1 1/4"	1 1/2"	2"	2 1/2"
	t	17	25	27	31	31
	AA	50	65	75	90	95
Weight / Ağırlık (~ for iron)	kg	1,7	2,4	3	4	5,5

WAFER DUAL PLATE CHECK VALVE

ÇİFT KLAPELİ ÇEK VALF

VWDC-10-16-25

Pressure Rate / Basınç Aralığı : PN 10 -16 -25
Size Range / Ölçü Aralığı: DN40 - DN800
Face to Face / L Boyu : EN 558 Serie 16, DIN 3202-K3
Flange Ends / Flanş : EN 1092
Tests / Testler : EN 12266-A

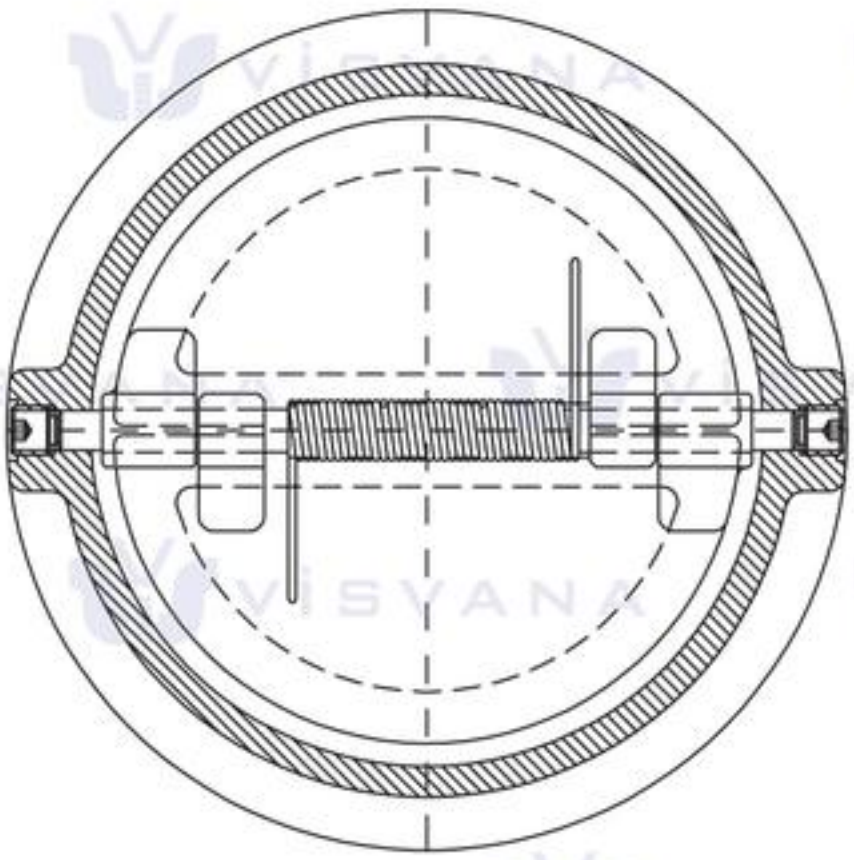

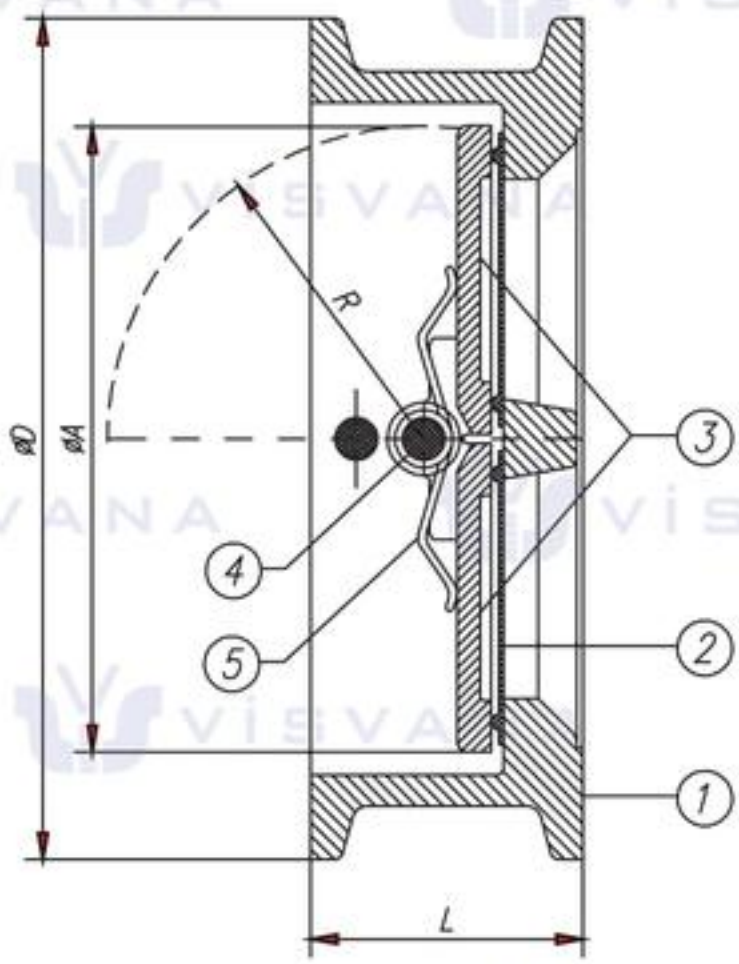

NO	PART NAME	PARÇA ADI	MATERIAL / MALZEME
1	Body	Gövde	GG 25/GGG 40/GS-C 25/AISI 304/AISI 316/Bronze
2	Sealing Ring	Sit	PTFE / EPDM / NBR / SS / Stellite 6
3	Plate	Disk	AISI 304 / AISI 316 / Bronze / GGG-40
4	Shaft	Mil	AISI 304 / AISI 316
5	Spring	Yay	AISI 302

Nominal Diameter Anma Çapı DN	ØA	R	L	ØD Nominal Pressure / Anma Basıncı PN 10	PN 16	PN 25	Weight Ağırlık kg
40	58	33	33	94		94	1
50			43	109		109	1
65			46	129		129	2
80	70	41	64	144		144	3
100	95	52	64	164		164	5
125	128	70	70	194		194	6
150	132		76	220		220	8
200	192	104	89	275		284	15
250	244	126	114	330	330	343	27,00
300	295	153	114	380	386	403	34,00
350	320	168	127	440	446	460	53,00
400	380	195	140	491	498	515	70,00
450	420	217	152	541	558	565	100,00
500	480	247	152	596	620	625	130,00
600	585	299	178	698	735	732	180,00
700	690	352	229	808	808	834	260,00
800	780	395	241	915	915	942	340,00

VDCV-16-40

DISC CHECK VALVE
DİSK ÇEK VALF

Pressure Rate / Basınç Aralığı : PN 16 -40
Size Range / Ölçü Aralığı: DN15-DN100 / DN125-DN200
Face to Face / L Boyu : EN 558 Serie 49, DIN 3202/3-K4, ISO 5752
Flange Ends / Flanş : DIN 2501
Tests / Testler : EN 12266

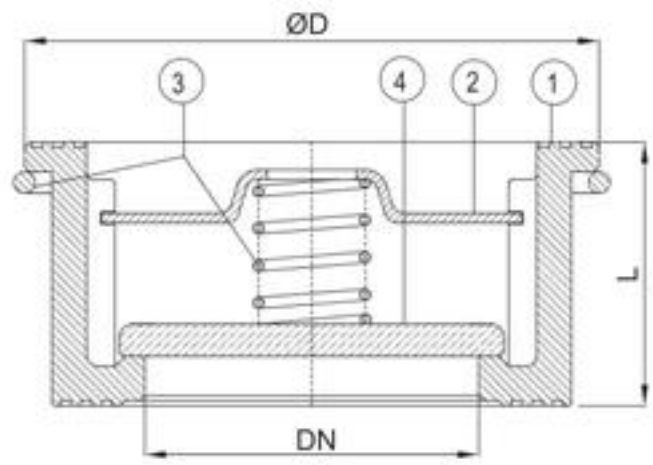

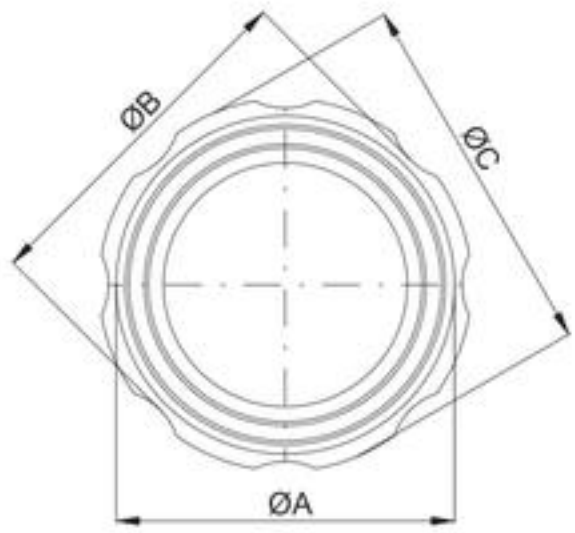

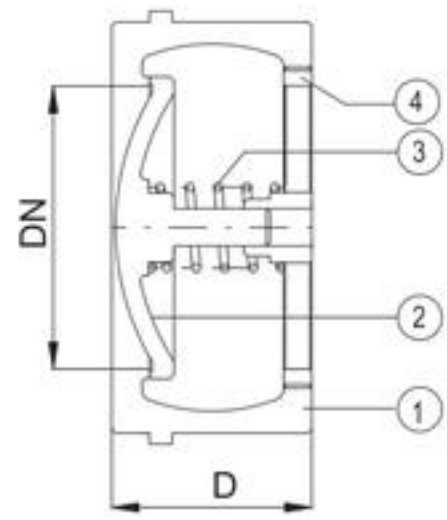

NO	PART NAME	PARÇA ADI	MATERIAL / MALZEME											
1	Body	Gövde	Bronze / Bronz				Steel / Çelik				AISI 316			
2	Disc Guide	Disk Klavuzu	AISI 316				AISI 316				AISI 316			
3	Spring	Yay	AISI 316				AISI 316				AISI 316			
4	Disc	Disk	AISI 304				AISI 304				AISI 304			
Pressure Ratting / Basınç Sınıfı			PN 16				PN 40				PN 40			
Pressure In Bares / Basınç Değişimi			16	15	14	13	40	35	28	21	40	34	32	29
Max. Temp.In °C / Max. Sıcaklık °C			120	180	200	250	120	200	300	400	120	200	300	400
Min. Temp.In °C / Min. Sıcaklık °C			-60	-60	-60	-60	-10	-10	-10	-10	-60	-60	-60	-60

NO	PART NAME	PARÇA ADI	MATERIAL / MALZEME							
1	Body	Gövde	Steel / Çelik				AISI 316			
2	Disc	Disk	AISI 304				AISI 304			
3	Spring	Yay	AISI 316				AISI 316			
4	Disc Guide	Disk Klavuzu	AISI 316				AISI 316			
Pressure Ratting / Basınç Sınıfı			PN 40				PN 40			
Pressure In Bares / Basınç Değişimi			40	35	28	21	40	34	32	29
Max. Temp.In °C / Max. Sıcaklık °C			120	200	300	400	120	200	300	400
Min. Temp.In °C / Min. Sıcaklık °C			-10	-10	-10	-10	-60	-60	-60	-60

	Flow Direction Akış Yönü	MINIMUM OPENING / MİNİMUM AÇMA PRESSURE (mbar) / BASINÇLAR (mbar)								
		DN 15	DN 20	DN 25	DN 32	DN 40	DN 50	DN 65	DN 80	DN 100
With Spring / Yaylı	⬌	21	21	21	21	21	21	21	21	21
	⬇	17	17	18,3	16,3	16,2	16,1	15	13,7	12,5
	⬇	23	23	23	23	24	25	25	26	26,5
Without Spring / Yaysız	⬇	2,6	2,6	2,6	3,9	4	4,2	5,1	5,6	7,4

	Flow Direction Akış Yönü	MINIMUM OPENING / MİNİMUM AÇMA PRESSURE (mbar) / BASINÇLAR (mbar)		
		DN 125	DN 150	DN 200
With Spring / Yaylı	⬌	22	23,5	24
	⬇	12	13	14,5
	⬇	30	32,5	35
Without Spring / Yaysız	⬇	15	17	18,5

Nominal Diameter / Anma Çapı	DIMENSIONS / ÖLÇÜLER									
	DN	15	20	25	32	40	50	65	80	100
Valve Dimensions / Vana Boyutları DIN 3202/3-K4	ØD	40	47	56	72	82	95	115	132	152
	L	16	19	22	28	32	40	46	50	60
Weight / Ağırlık	kg	0,100	0,135	0,200	0,460	0,630	0,980	1,350	2,080	3,040

Nominal Diameter / Anma Çapı	DIMENSIONS / ÖLÇÜLER			
	DN	125	150	200
Valve Dimensions / Vana Boyutları DIN 3202/3-K4	ØA	184	209	276
	ØB	194	221	287
	ØC	-	227	-
	D	90	106	140
Weight / Ağırlık	kg	9	14	24

BALL CHECK VALVE
TOPLU ÇEK VALF

VTCV-10

Face to Face / L Boyu : EN 558 Serie 48, DIN 3202 F6
Tests / Testler : EN 12266

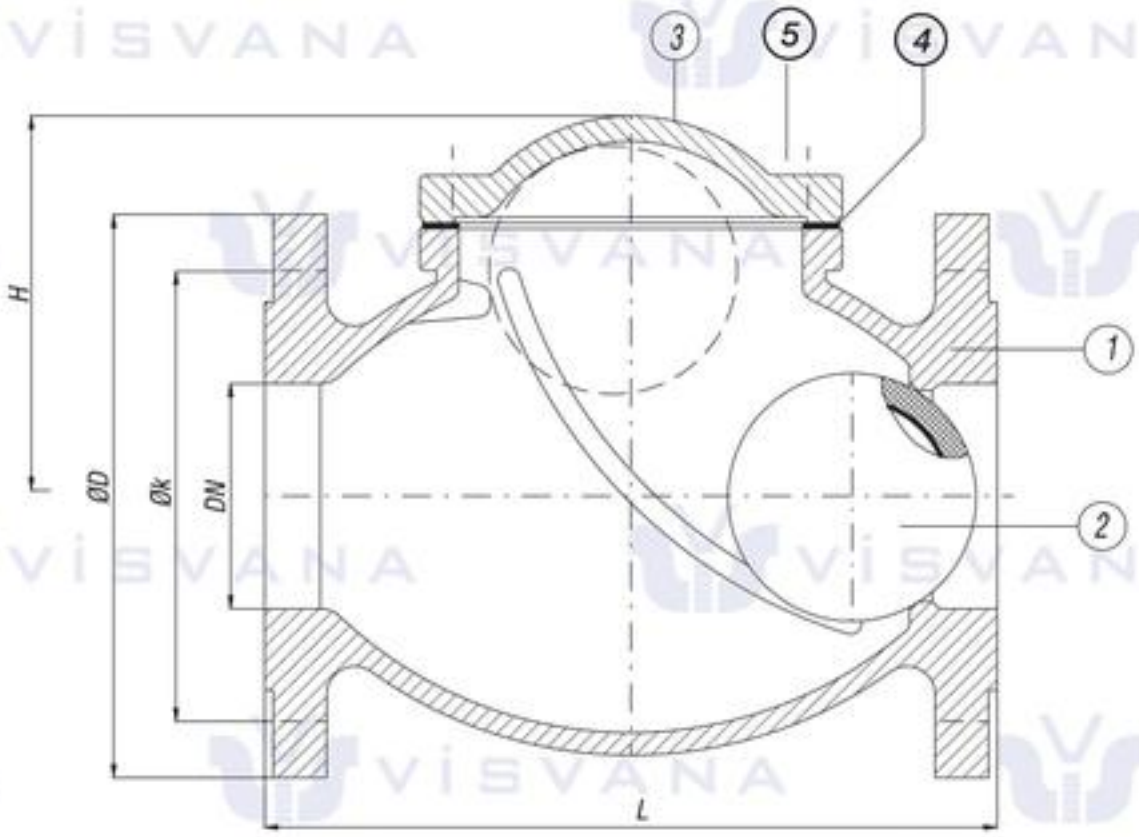

NO	PART NAME	PARÇA ADI	MATERIAL / MALZEME
1	Body	Gövde	GG 25 / GGG 40 / 50
2	Ball	Küre	NBR + (GG-25) St-37
3	Bonnet	Kapak	GG 25 / GGG 40 / 50
4	Gasket	Conta	NBR
5	Bolt	Civata	5D / Paslanmaz Çelik

Nominal Pressure / Anma Basıncı	PN 10													
Nominal Diameter / Anma Çapı	DN	40	50	65	80	100	125	150	200	250	300	350	400	500
Valve Dimensions / Vana Boyutları DIN 3202/2-F6	L	180	200	240	260	300	350	400	500	600	700	800	900	1100
	H	100	110	130	145	170	195	205	260	390	500	500	600	800
Flange Dimensions / Flanş Ölçüleri DIN 2501/TS 810 PN 10	D	150	165	185	200	220	250	285	340	395	445	505	565	670
	k	110	125	145	160	180	210	240	295	350	400	460	515	620
Weight / Ağırlık (~ for iron)	kg	8	9	12	14	22	30	49	98	125	240	390	470	800












Butterfly Valves, Air Reliese Valves, Dismantling Joints

Kelebek Vanalar, Vantuzlar, Demontajlar, Flanş Adaptörleri

4
Butterfly Valves

Products & Technical Data

Teknik Bilgiler

www.visvana.com

VWKV-16

WAFER TYPE BUTTERFLY VALVE

WAFER TİP KELEBEK VANA

Pressure Rate / Basınç Aralığı : Max. PN16
Size Range / Ölçü Aralığı: DN50 - DN600
Face to Face / L Boyu : EN 558 Serie 20, DIN 3202-K1
Tests / Testler : EN 12266

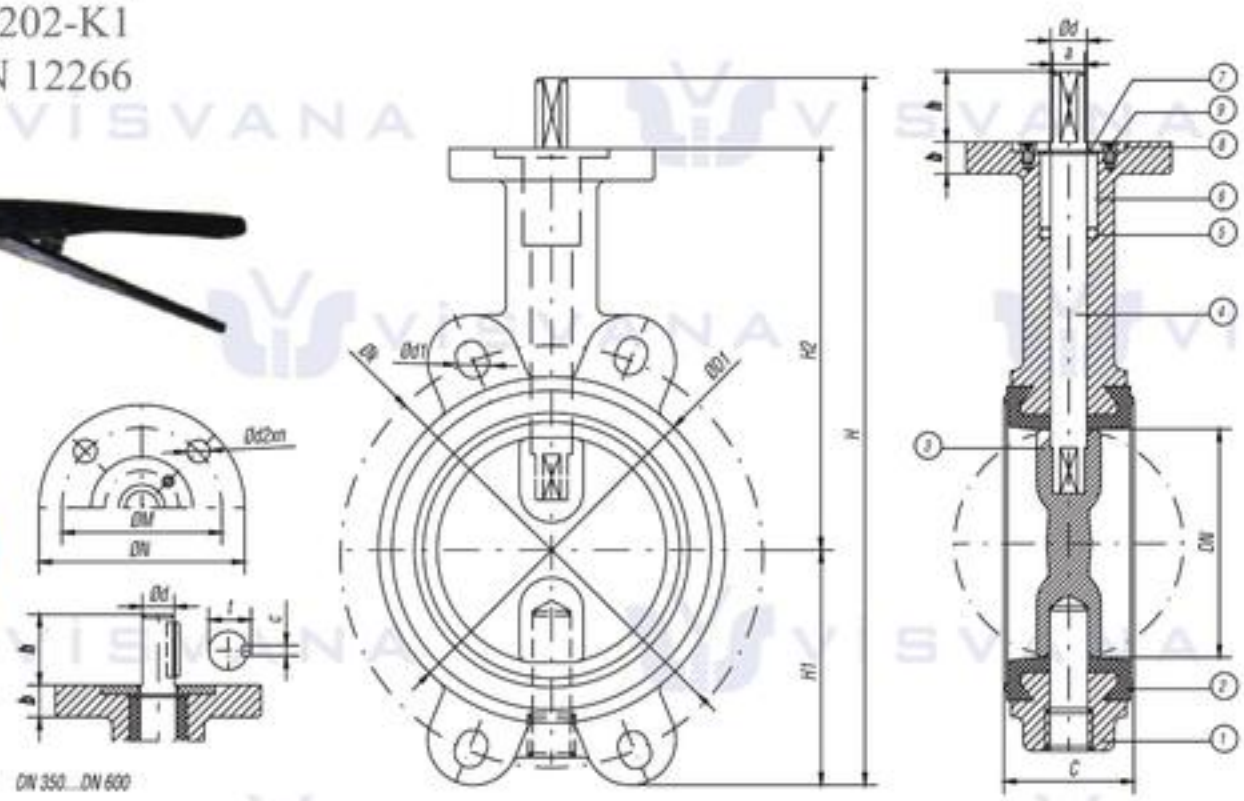

NO	PART NAME	PARÇA ADI	MATERIAL / MALZEME	NO	PART NAME	PARÇA ADI	MATERIAL / MALZEME
1	*Body*	Gövde	GG 25/GGG 40/50 / GS-C 25 / AISI 304	6	*Gland Bush*	Baskı Burcu	PVC / PTFE
2	*Gasket*	Conta	EPDM / BUNA-N	7	*Retaining Ring*	Segman	St
3	*Disc*	Klape	GGG 40 / AISI 304 / AISI 316 /Bronze	8	*Washer*	Rondela	St-37
4	*Stem*	Mil	AISI 420 / AISI 316	9	*Bolt*	Civata	5D / S.S
5	*O-Ring*	O-Ring	EPDM / BUNA-N				

Nominal Diameter / Anma Çapı		DN	50	65	80	100	125	150	200	250	300	350	400	450	500	600
			2"	2 1/2"	3"	4"	5"	6"	8"	10"	12"	14"	16"	18"	20"	24"
Valve Dimensions / Vana Boyutları TS 11341 DIN 3337/K1 ISO 5752/20-5		C	43	46		52	56		60	68	78		102	114	127	154
		H1	67	74	96	110	122	136	160	201	237	267	302	325	362	422
		H2	140	152	159	177	190	203	241	273	311	350	375	400	450	510
		H Kollu	237	254	283	315	340	367	439	512	600					
		H Redüktörlü	275	294	323	355	380	407	480	553	630	784	844	892	1008	1128
		ØD1	94	112	126	152	185	210	262	316	372					
Top Flange Dimensions / Üst Flanş Boyutları DIN3337 ISO 5211/1		ØN	90						152			175			210	
		ØM	70						125			140			165	
		Ød2xn	Ø10x4						Ø14x4			Ø19x4			Ø23x8	
		b	12						15,5			20		23	25	
Stem Dimensions / Mil Boyutları DIN 3337 ISO 5211/1		Ød	Ø14			Ø16			20	22	28	42	48	52	58	68
		a	12			14			17	19	25					
		h	31						38			105			130	
		t										45	51,5	56	62	72,5
		c										12	14	16	18	20
Flange Dimensions / Flanş Boyutları TS 810 DIN 2501	PN 6	Øk	110	130	150	170	200	225	280	335	395					
	PN 6	Ød1xn.	Ø14x4			Ø18x4					22x4					
	PN 10	Øk	125	145	160	180	210	240	295	350	400	460	515	565	620	725
	PN 10	Ød1xn	Ø18x4					23x4					Ø27x4			30x4
	PN 16	Øk	125	145	160	180	210	240	295	355	410	470	525	585	650	770
	PN 16	Ød1xn	Ø18x4					Ø23x4		Ø27x4			Ø30x4		33x4	36x4
Weight / Ağırlık (~ for iron)		kg	3,5	4,0	4,4	6,0	7,3	8,5	15,8	22,4	32,9	54	76	93	133	198

LUG TYPE BUTTERFLY VALVE
LUG TİP KELEBEK VANA

VLKV-16

Pressure Rate / Basınç Aralığı : Max. PN16
Size Range / Ölçü Aralığı: DN50 - DN600
Face to Face / L Boyu : EN 558 Serie 20, DIN 3202-K1
Tests / Testler : EN 12266

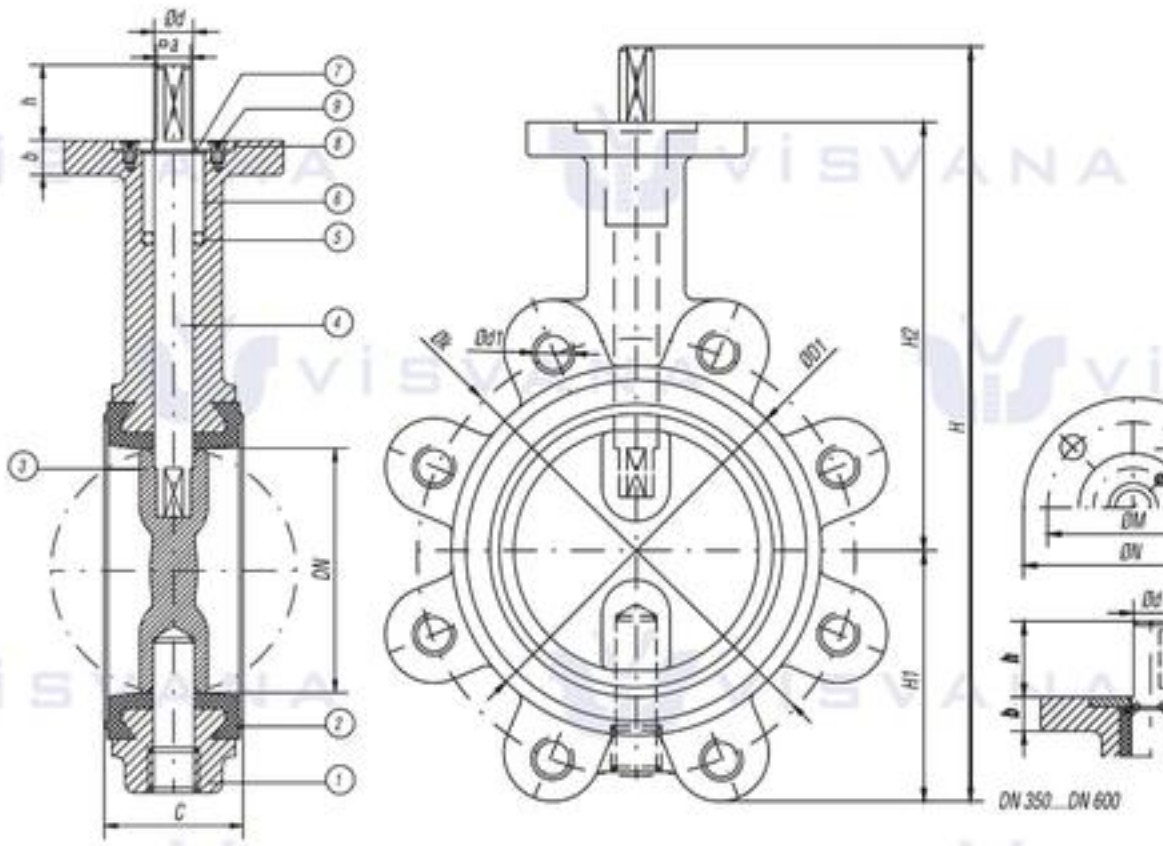

NO	PART NAME	PARÇA ADI	MATERIAL / MALZEME	NO	PART NAME	PARÇA ADI	MATERIAL / MALZEME
1	*Body*	Gövde	GG 25/GGG 40/50 / GS-C 25 / AISI 304	6	*Gland Bush*	Baskı Burcu	PVC / PTFE
2	*Gasket*	Gövde Yatağı	EPDM / BUNA-N	7	*Retaining Ring*	Segman	St
3	*Disc*	Klape	GGG 40 / AISI 316 / Bronze	8	*Washer*	Rondela	St-37
4	*Stem*	Mil	AISI 420 / AISI 316	9	*Bolt*	Civata	5D / S.S
5	*O-Ring*	O-Ring	EPDM / BUNA-N				

Nominal Diameter / Anma Çapı		DN	50	65	80	100	125	150	200	250	300	350	400	450	500	600
			2"	2 1/2"	3"	4"	5"	6"	8"	10"	12"	14"	16"	18"	20"	24"
Valve Dimensions / Vana Boyutları TS 11341 DIN 3337/K1 ISO 5752/20-5		C	43	46		52	56		60	68	78		102	114	127	154
		H1	67	74	96	110	122	136	160	201	237	267	302	325	362	422
		H2	140	152	159	177	190	203	241	273	311	350	375	400	450	510
		H Kollu	237	254	283	315	340	367	439	512	600					
		H Redüktörlü	275	294	323	355	380	407	480	553	630	784	844	892	1008	1128
		ØD1	94	112	126	152	185	210	262	316	372					
Top Flange Dimensions / Üst Flanş Boyutları DIN3337 ISO 5211/1		ØN	90						152			175			210	
		ØM	70						125			140			165	
		Ød2xn	Ø10x4						Ø14x4			Ø19x4			Ø23x8	
		b	12						15,5			20		23	25	
Stem Dimensions / Mil Boyutları DIN 3337 ISO 5211/1		Ød	Ø14			Ø16			20	22	28	42	48	52	58	68
		a	12			14			17	19	25					
		h	31						38			105			130	
		t										45	51,5	56	62	72,5
		c										12	14	16	18	20
Flange Dimensions / Flanş Boyutları TS 810 DIN 2501	PN 6	Øk	110	130	150	170	200	225	280	335	395					
		Ød1xn	M12x4		M16x4		M16x8			M16x12	M20x12					
	PN 10	Øk	125	145	160	180	210	240	295	350	400	460	515	565	620	725
		Ød1xn	M16x4		M16x8			M20x8		M20x12		M20x16	M24x16	24x20		M27x20
	PN 16	Øk	125	145	160	180	210	240	295	355	410	470	525	585	650	770
		Ød1xn	M16x4		M16x8			M20x8	M20x12	M24x12		M24x16	M27x16	M27x20	M30x20	M33x20
Weight / Ağırlık (~ for iron)		kg	4,6	5,2	6,8	8,5	10,5	12,5	20,2	29,5	46,5	71	107	140	186	267

VWKF-16
VWKF-C150

U-TYPE DOUBLE FLANGED BUTTERFLY VALVE

U-TİP ÇİFT FLANŞLI KELEBEK VANA

Pressure Rate / Basınç Aralığı : PN 10 -16 /Class 150
Size Range / Ölçü Aralığı: DN40 - DN1400
Face to Face / L Boyu : EN 558 Serie 20, DIN 3202-K1
Flange Ends / Flanş : EN 1092
Tests / Testler : EN 12266

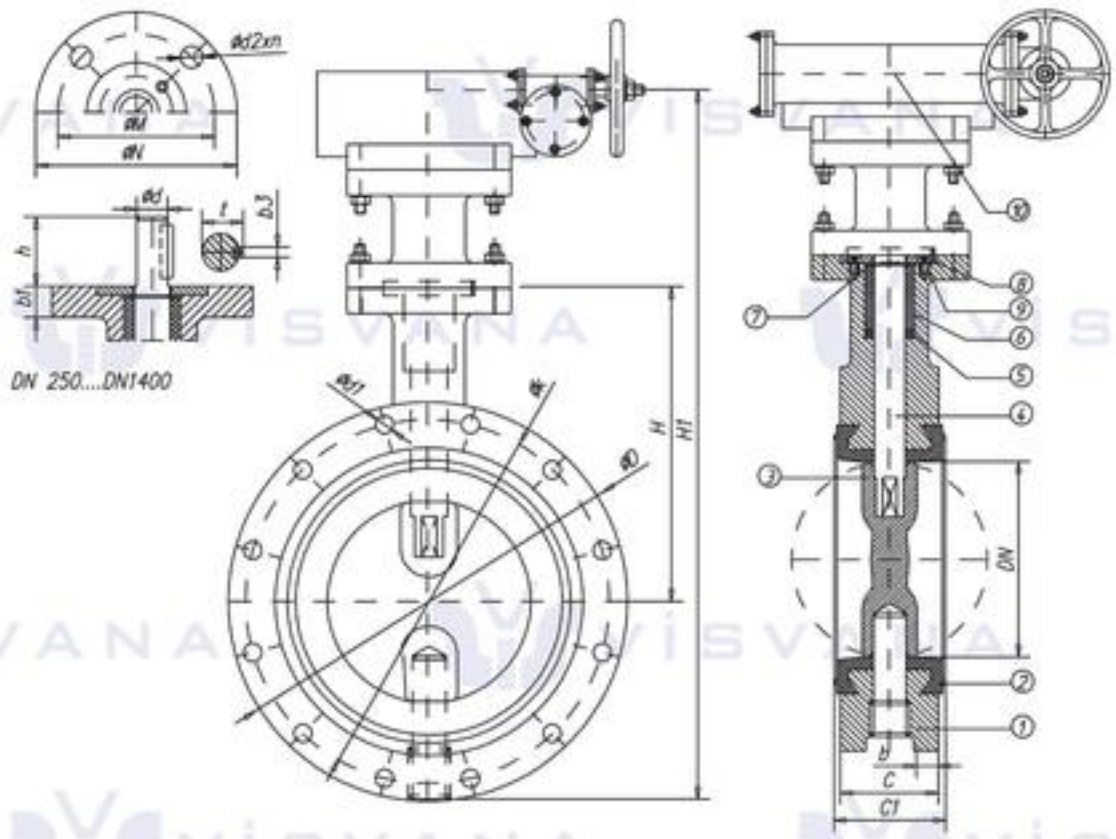

NO	PART NAME	PARÇA ADI	MATERIAL / MALZEME	NO	PART NAME	PARÇA ADI	MATERIAL / MALZEME
1	Body	Gövde	GG 25 GGG 40/50 / GS-C 25	6	Gland Bush	Baskı Burcu	PTFE / Bronze
2	Gasket	Gövde Yatağı	EPDM / NBR / VITON	7	Retaining Ring	Segman	St / SS
3	Disc	Klape	GGG 40 / SS / Bronze	8	Washer	Rondela	St-37 / SS / Bronze
4	Stem	Mil	AISI 420 / AISI 316	9	Bolt	Civata	A2 / A4 / SS
5	O-Ring	O-Ring	EPDM / NBR / VITON	10	Gearbox	Dişli Kutusu	GGG-40

Nominal Diameter / Anma Çapı		DN	40	50	65	80	100	125	150	200	250	300	350	400	450	500	600	700	800	900	1000	1100	1200	1300	1400
			1 1/2"	2 1/2"	2"	3"	4"	5"	6"	8"	10"	12"	14"	16"	18"	20"	24"	28"	32"	36"	40"	41"	48"	52"	56"
Valve Dimensions / Vana Boyutları DIN3337/K1 ISO 5752/20-5 DIN EN 558-1/20		C	33	43	46		52	56		60	68	78		102	114	127	154	165	190	203	216	254	254	280	280
		C1	37	47	50		56	60		64	71	84		108	120	133	160	171	196	208	224	262	262	288	288
		H	130	140	152	159	177	190	203	241	250	282	320	360	408	432	520	550	585	630	770	840	900	970	1025
		H1	260	295	310	320	360	400	430	550	600	620	700	825	900	1000	1100	1150	1250	1350	1400	1500	1700	1800	1900
		b	10	11		12		13		15		20			25		30	32		34	36	40		44	
Top Flange Dimensions / Üst Flanş Boyutları DIN3337 ISO 5211/1		ØN	65				90			125				175			210			300		350			415
		ØM	50				70			102				140			165			254		298			356
		Ød2xn	Ø7x4				Ø10x4			Ø12x4				Ø18x4			Ø22x4			Ø18x8		Ø22x8			Ø33x8
		b1	10				12			16				22			26			32			35		
Stem Dimensions / Mil Boyutları DIN3337 ISO 5211/1		Ød	Ø14x9				Ø16x11			Ø22		Ø28		Ø38		Ø45	Ø55		Ø60	Ø80		Ø90			Ø120
		h	32							60				70			90			100		120			170
		t								25		31		43		50,5	60,5		65,5	85,5		97,5			128,1
		b3								8				12			14			20		32			40
Flange Dimensions / Flanş Boyutları DIN EN 1092-2 BS 4504 CLASS 150	PN 16	ØD	150	165	185	200	220	250	285	340	405	460	520	580	640	715	840	910		1025	1125	1255	1355	1485	1590	1685
		Øk	110	125	145	160	180	210	240	295	355	410	470	525	585	650	770	840		950	1050	1170	1280	1390	1490	1590
		Ød1xn	18x4				18x8		22x8	22x12	26x12		26x16	30x16	30x20	33x20	36x20	36x24		39x24	39x28	42x28	42x32	49x32	49x32	49x36
	PN 10	ØD	150	165	185	200	235	270	300	340	395	445	505	565	615	670	780	895		1015	1115	1230	1340	1455	1575	1675
		Øk	110	125	145	160	190	220	250	295	350	400	450	515	565	620	725	840		950	1050	1160	1270	1380	1490	1590
		Ød1xn	18 x 4				18 x 8		22 x 8		22 x 12		22x16	26x16	26 x 20		30x20	30x24		33x24	33x28	36x28	36x32	39x32	42x32	42x36
	Class 150	ØD	127	152,5	178	190,5	228,6	254	279,5	343	406,5	482,5	533,5	597	635	699	813	927		1060	1168	1289	1403	1511	1626	1746
		Øk	98,5	120,7	139,7	152,4	190,5	216	241,3	298,5	362	432	476,3	540	578	635	749,3	864		978	1086	1200	1314	1422	1537	1651
		Ød1xn	16x4	19x4			19x8		22x8		25x12		29x12	29x16	32x16	32x20	35x20	35x28		41x28	41x32	41x36	41x40	41x44	48x44	48x44
Weight / Ağırlık		kg	4	5	7	9	12	14	19	22	32	42	55	110	145	184	262	350		450	582	710	1150	1300	1550	1810

DOUBLE FLANGED BUTTERFLY VALVE

ÇİFT FLANŞLI KELEBEK VANA

VFKV-16

Pressure Rate / Basınç Aralığı : PN 10 -16 -25 -40
Size Range / Ölçü Aralığı: DN100 - DN1200
Face to Face / L Boyu : EN 558 Serie 14, DIN 3202 F4
Face to Face / L Boyu : EN 558 Serie 13, BS 5155
Flange Ends / Flanş : EN 1092
Tests / Testler : EN 12266

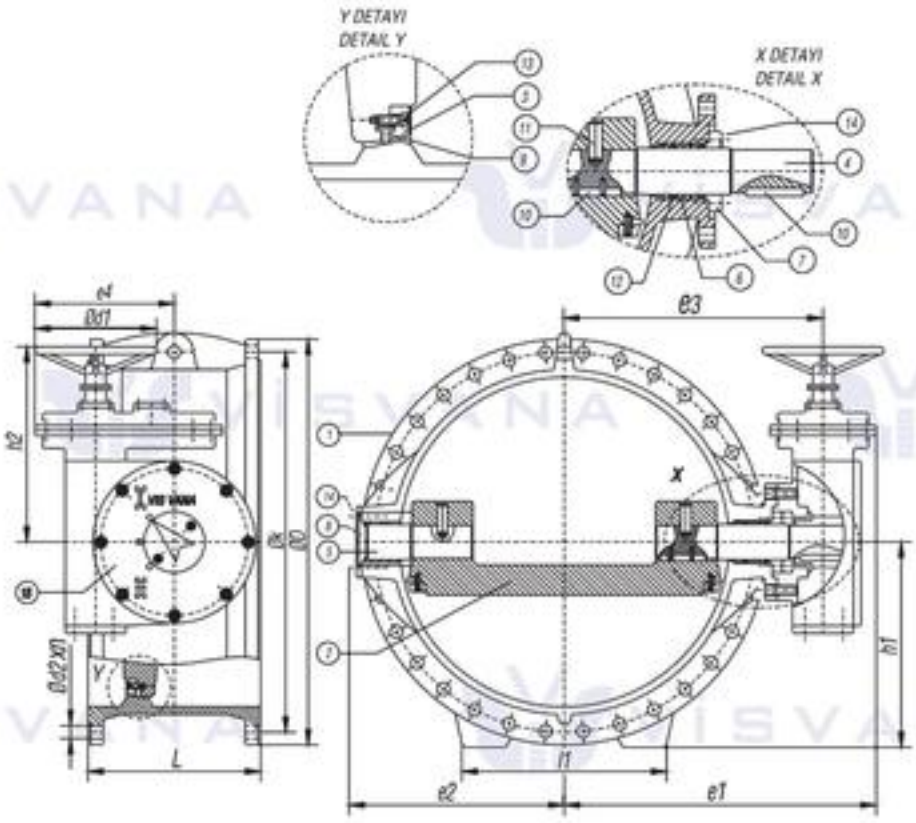

NO	PART NAME	PARÇA ADI	MATERIAL / MALZEME	NO	PART NAME	PARÇA ADI	MATERIAL / MALZEME
1	*Body*	Gövde	GGG-40/50 / GSC25 / AISI 304	9	*Sealing Ring*	Sızdırmazlık Ringi	EPDM
2	*Disc*	Klape	GGG-50 / GS-C 25 / Al-Bronze	10	*Key*	Kama	Steel Ck-45
3	*Reating Ring*	Baskı Çemberi	St37 / 304 / 316	11	*Setscrew*	Setskur	Stainless Steel-A2 / A4
4	*Stem-Driven End*	Tahrik Mili	AISI 420 (X20 Cr 13) / 304 / 316	12	*O-Ring*	O-Ring	EPDM / BUNA-N
5	*Stem-Free End*	Kısa Mil	AISI 420 (X20 Cr 13) / 304 / 316	13	*Screw*	İmbus Civata	Stainless Steel-A2
6	*Bearing Bush*	Yatak Burcu	TEFLON / PTFE	14	*Bolt*	Civata	5 D
7	*Cover-Driven End*	Mil Kapağı	GGG-50 / GS-C 25 / 304 / 316	15	*Worm Gear Unit*	Tahrik Kutusu	GGG-50 / St
8	*Cover-Free End*	Kısa Mil Kapağı	GGG-50 / GS-C 25 / 304 / 316				

		DN	100	125	150	200	250	300	350	400	450	500	600	700	800	900	1000	1100	1200
Valve Dimensions Vana Boyutları DIN 3202/2-F4 BS 5155		L DIN 3202/F4	190	200	210	230	250	270	290	310	330	350	390	430	470	510	550	590	630
		L BS 5155	127	140	140	152	165	178	190	216	222	229	267	292	318	330	410	440	470
		e1	250	262	284	307	387	423	438	482	515	573	641	729	790	845	920	980	1168
		e2	105	117	128	157	213	242	273	299	335	355	430	465	521	576	650	710	765
		e3	198	210	232	255	319	355	370	414	447	491	559	599	660	715	790	850	945
		e4	134				158		172			238		314		366			515
		h1	110	125	143	170	212	240	270	295	325	367	430	465	522	570	632	695	752
		h2	205				255		275			410		476		515			620
		d1	180				215		250			320				385			
		l1					260	335	345	375	450	470	545	590	660	720	770		965
Flange Dimensions Flanş Boyutları TS 810 DIN 2501 BS 4504	PN 10	ØD	220	250	285	340	395	445	505	565	615	670	780	895	1015	1115	1230	1340	1455
		Øk	180	210	240	295	350	400	460	515	565	620	725	840	950	1050	1160	1270	1380
		Ød2xn	Ø18x8		Ø22x8		Ø22x12		Ø22x16	Ø26x16	Ø26x20		Ø30x20	Ø30x24	Ø33x24	Ø33x28	Ø36x28	Ø36x32	Ø39x32
	PN 16	ØD	220	250	285	340	405	460	520	580	640	715	840	910	1025	1125	1255	1355	1485
		Øk	180	210	240	295	355	410	470	525	585	650	770	840	950	1050	1170	1270	1380
		Ød2xn	Ø18x8		Ø22x8	Ø22x12	Ø26x12		Ø26x16	Ø30x16	Ø30x20	Ø33x20	Ø36x20	Ø36x24	Ø39x24	Ø39x28	Ø42x28	Ø42x32	Ø49x32
	PN 25	ØD	235	270	300	360	425	485	555	620	670	730	845	960	1085	1185	1320		1530
		Øk	190	220	250	310	370	430	490	550	600	660	770	875	990	1090	1210		1420
		Ød2xn	Ø22x8	Ø26x8		Ø26x12	Ø30x12	Ø30x16	Ø33x16	Ø36x16	Ø36x20		Ø39x20	Ø42x24	Ø48x24	Ø48x28	Ø56x28		Ø56x32
	PN 40	ØD	235	270	300	375	450	515	580	660	685	755	890	995	1140	1250	1360		1530
		Øk	190	220	250	320	385	450	510	585	610	670	795	900	1030	1140	1250		1430
		Ød2xn	Ø22x8	Ø26x8		Ø30x12	Ø33x12	Ø33x16	Ø36x16	Ø39x16	Ø39x20	Ø42x20	Ø48x20	Ø48x24	Ø56x24	Ø56x28			
Weight / Ağırlık (~ for iron)		kg	30	35	45	50	95	120	160	200	255	300	460	635	790	1020	1355	1710	2400

VHPBV-C150

TRIPLE OFFSET BUTTERFLY VALVE

YÜKSEK PERFORMANSLI KELEBEK VANA

Design / Dizayn: API 609
Face to Face / L Boyu: API 609
P. Rate / B. Aralığı: PN 20 (150Lb)
Size Range / Ölçü Aralığı: DN 50(2") - DN 600 (24")
Temperature / Sıcaklık: -20°C+420°C
Connection Ends / Bağlantı: Wafer, Lug, Flanged
Test: API 598

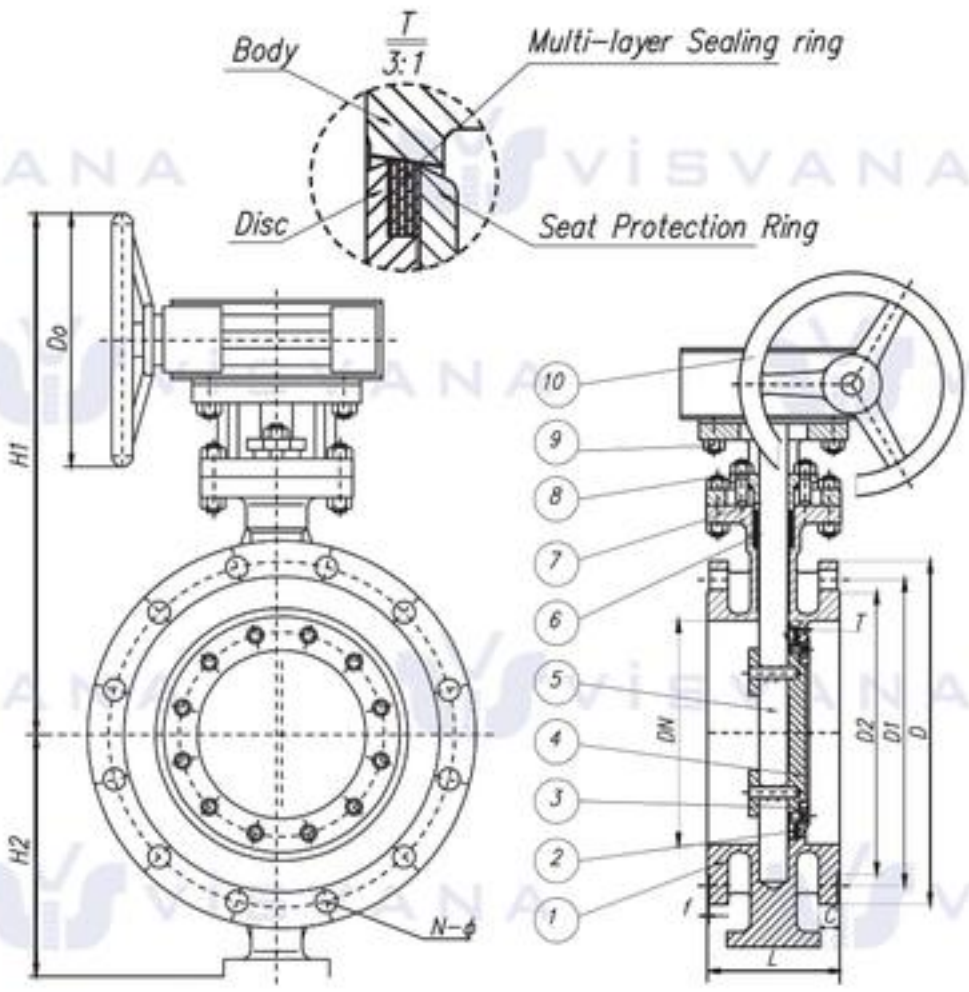

TESTING STANDART			PRODUCTION STANDART	
Design Pressure	150 LB		*Design & Manifacture*	API 609
Shell Test	3,1	MPa	*Flange Connection*	ANSI B16.5
Seall Test	2,2		*Face To Face*	ANSI B16.10
Suitable Temp.	-99°C / 500°C		*Testing & Inspection*	API 598
Suitable Medium	Oil / Gas / Water		*Fire Safe*	

NO	PART NAME	PARÇA ADI	MATERIAL/MALZEME	NO	PART NAME	PARÇA ADI	MATERIAL/MALZEME
1	*Body*	Gövde	ASTM A216 WCB	6	*Packing*	Salmastra	Graphite
2	*Multi-Layer S. Ring*		SS304 + Graphite	7	*Flange Gland*		ASTM A216 WCB
3	*Seat Protection Ring*		ASTM SS 316	8	*Bolt*	Civata	ASTM A 193 B7
4	*Disc*	Klape	ASTM SS 316	9	*Nut*	Somun	ASTM A 194 2H
5	*Stem*	Mil	ASTM A 182 F6	10	*Worm Gear*		

DIMENSIONS (mm) ÖLÇÜLER (mm)	in	L	D	D1	D2	N-Ø	C	F	H1	H2	DO
150 Lb	2"	108	152	120,7	92	4-19	16,0	1,6	290	110	145
	3"	114	191	139,7	127		19,5		315	130	
	4"	127	229	152,4	157	8-19	24,0		360	170	
	5"	140	254	190,5	186	8-22	24,0		470	185	290
	6"	140	279	216,0	216		25,5		505	210	
	8"	152	343	241,3	270		29,0		570	240	340
	10"	165	406	298,5	324	12-25	30,5		610	285	
	12"	178	483	362,0	381		32,0		690	310	380
	14"	190	533	431,8	413	12-28	35,0		730	350	
	16"	216	597	476,3	470	16-28	37,0		770	375	
	18"	222	635	539,8	533	16-32	40,0		835	405	
	20"	229	699	635,0	584	20-32	43,0		925	455	
	24"	267	813	749,3	692	20-35	48,0		940	510	

DISMANTLING JOINTS-RIGID TYPE

RİJİT TİP DEMONTAJ PARÇASI

VDPR-10-16

Pressure Rate / Basınç Aralığı: PN10-16
Size Range / Ölçü Aralığı: DN100-DN1500
Flange Ends / Flanş: DIN, ANSI, JIS
Test: EN 12266

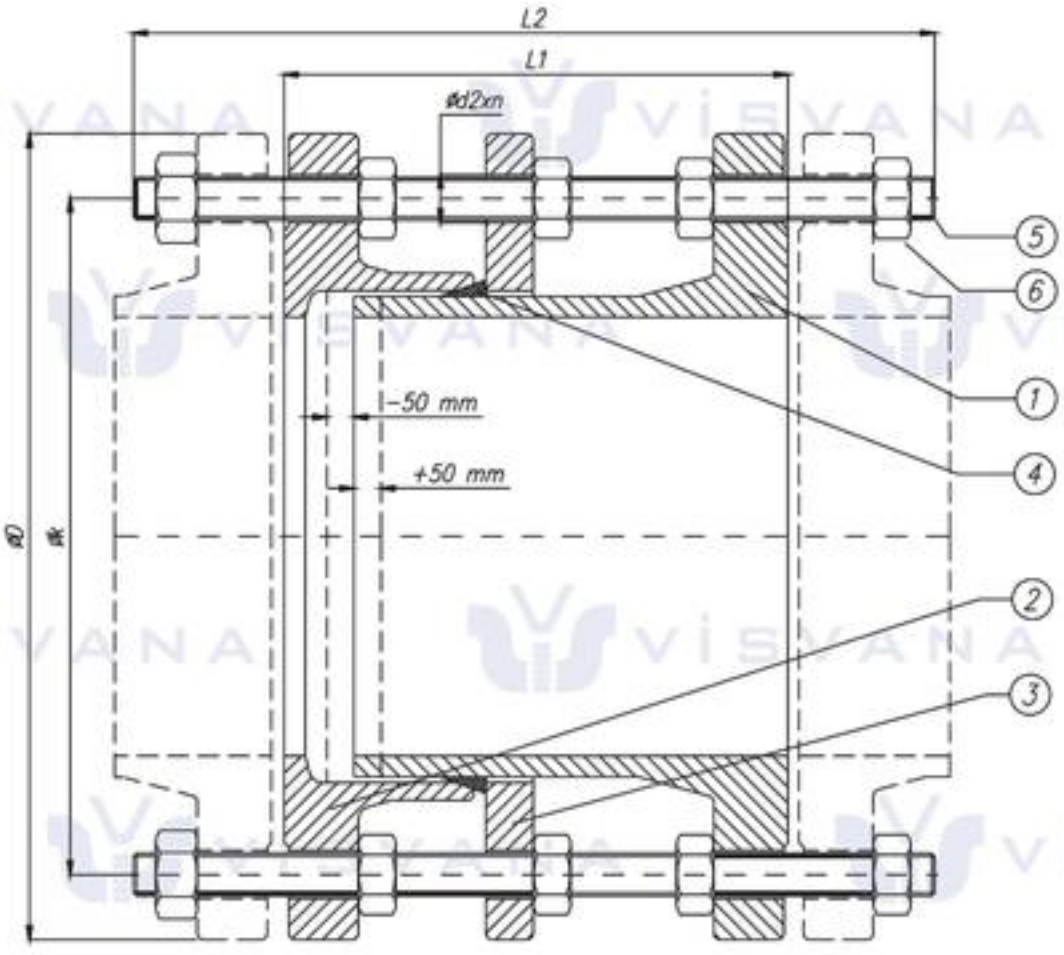

NO	PART NAME	PARÇA ADI	MATERIAL / MALZEME
1	*Flange Pipe-Long*	Uzun Parça	GGG-40
2	*Flange Pipe-Short*	Kısa Parça	GGG-40
3	*Retainig Flange*	Baskı Flanşı	GGG-40
4	*Sealing Ring*	Sızdırmazlık Ringi	EPDM/NBR
5	*Stud Bold*	Saplama	Ck-40(Gal. Zn)
6	*Nut*	Somun	Ck-40(Gal. Zn)

Nominal Diameter Anma Çapı		DN	100	125	150	200	250	300	350	400	450	500	600	700	800	900	1000	1100	1200	1300	1400	1500
Valve Dimensions Vana Boyutları	PN 10	L1	200				220		230		250		260			290		300	320	340	360	380
		L2	310		320	340		360		370	390	400	410		460		480		520	560	580	590
	PN 16	L1	200			220	230	250	260		270	280	300		320		340		360	380		400
		L2	340	370		370	410			480		500	540	560	600	630	660		600	630		700
Flange Dimensions Flanş Boyutları BS 4504 DIN EN 1092-1/2	PN 10	ØD	220	250	285	340	400	455	505	565	615	670	780	895	1015	1115	1230	1430	1455	1575	1675	1785
		Øk	180	210	240	295	350	400	460	515	565	620	725	840	950	1050	1160	1270	1380	1490	1590	1700
		Ød2xn	Ø18x8		Ø22x8		Ø22x12		Ø22x16	Ø26x16	Ø26x20		Ø30x20	Ø30x24	Ø33x24	Ø33x28	Ø36x28	Ø36x32	Ø39x32	Ø42x32	Ø42x36	Ø48x36
	PN 16	ØD	220	250	285	340	400	455	520	580	640	715	840	910	1025	1125	1255	1355	1485	1590	1685	1820
		Øk	180	210	240	295	355	410	470	525	585	650	770	840	950	1050	1170	1280	1390	1490	1590	1710
		Ød2xn	Ø18x8		Ø22x8	Ø22x12	Ø26x12		Ø26x16	Ø30x16	Ø30x20	Ø33x20	Ø36x20	Ø36x24	Ø39x24	Ø39x28	Ø42x28	Ø42x32	Ø48x32		Ø48x36	Ø55x36
Weight / Ağırlık (~ for iron)		kg	20	23	32	46	57	78	102	128	135	200	305	365	410	540	700	820	1120	1210	1310	1480

VFA-10-16

FLANGE ADAPTOR
FLANŞ ADAPTÖRÜ

Pressure Rate / Basınç Aralığı: PN10 -PN 16
Size Range / Ölçü Aralığı: DN 50 - DN 1000
Flange Ends / Flanş: EN 1092-2 / ASME B16,5
Test: EN 12266

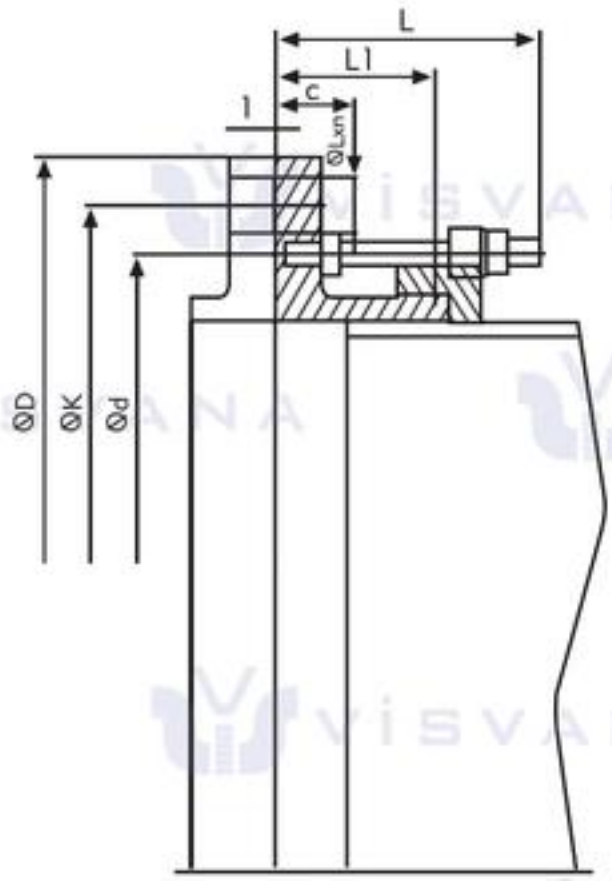

DN	PN	ØD	ØK	Ød	C	f	ØLxn	L	L1
50	10/16	165	125	99	19	3	19x4	105	75
65	10/16	185	145	118	19	3	19x4	105	75
80	10/16	200	160	132	19	3	19x8	110	75
100	10/16	220	180	156	19	3	19x8	120	75
125	10/16	250	210	184	19	3	19x8	135	75
150	10/16	285	240	211	19	3	23x8	135	75
200	10	340	295	266	20	3	23x8	135	75
200	16	340	295	266	20	3	23x12	135	75
250	10	395	350	319	22	3	23x12	140	75
250	16	405	355	319	22	3	28x12	140	75
300	10	445	400	370	25	4	23x12	135	75
300	16	460	410	370	25	4	28x12	135	75
350	10	505	460	429	25	4	23x16	150	85
350	16	520	470	429	27	4	28x16	150	85
400	10	565	515	480	25	4	28x16	150	100
400	16	580	525	480	28	4	31x16	150	100
500	10	670	620	582	27	4	28x20	165	100
500	16	715	650	609	32	4	34x20	165	100
600	10	780	725	682	30	5	31x20	165	100
600	16	840	770	720	36	5	37x20	165	100
700	10	895	840	794	33	5	31x24	165	100
700	16	910	840	794	40	5	37x24	165	100
800	10	1015	950	901	35	5	34x24	165	100
800	16	1025	950	901	43	5	41x24	165	100
900	10	1115	1050	1001	38	5	34x28	180	115
900	16	1125	1050	1001	47	5	41x28	180	115
1000	10	1230	1160	1112	40	5	37x28	180	115
1000	16	1255	1170	1112	40	5	44x28	180	115

SINGLE & DOUBLE AIR RELEASE VALVE

TEK & ÇİFT KÜRELİ VANTUZ

VTKV-16
VÇKV-16

Pressure Rate / Basınç Aralığı: PN 16-25
Size Range / Ölçü Aralığı: DN50-DN200
Flange Ends / Flanş: EN 1092-2
Test: EN 12266

NO	PART NAME	PARÇA ADI	MATERIAL / MALZEME
1	*Body*	Gövde	GG 25 / GGG-40
2	*Ball*	Küre	ST 37 + Perbunan
3	*Cover*	Kapak	GG 25 / GGG-40
4	*Seal*	Conta	EPDM
5	*Gasket*	Conta	EPDM / KLINGERIT
6	*Top Cover*	Toz Kapağı	GG 25

			PN 16/10			PN 25		
DN	B	H	ØD	Øk	Weight Ağırlık Kg	ØD	Øk	Weight Ağırlık Kg
50	160	230	165	125	8	165	165	9
80	250	290	200	160	17	200	160	19
100	270	330	220	180	18	235	190	20
150	310	435	285	240	50	300	250	55
200	310	440	340	295	55	360	310	61

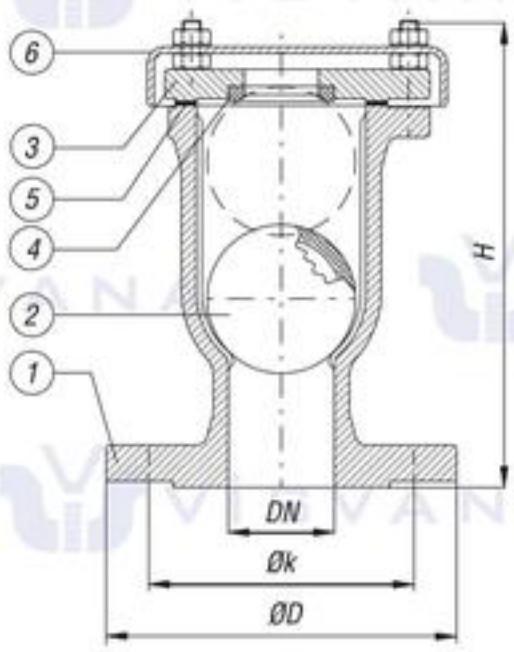

Pressure Rate / *Basınç Aralığı*: PN 16-25
Size Range / *Ölçü Aralığı*: DN50-DN250
Flange Ends / *Flanş*: EN 1092-2
Test: EN 12266

NO	P. NAME	P. ADI	MAT. / MALZ.	NO	P. NAME	P. ADI	MAT. / MALZ.
1	*Body*	Gövde	GG 25 / GGG-40	9	*Cover*	Kapak	GG 25 / GGG-40
2	*Body Seat*	Gövde Burcu	Ms 58 / Bronze / SS	10	*Packing*	Salmastra	Teflon / Graphite
3	*Ball*	Küre	St37 + EPDM	11	*Packing Nut*	Baskı	Ms 58 / Bronze / SS
4	*Disc*	Klape	GGG 40 / SS304	12	*Cover*	Kapak	GG 25 / GGG-40
5	*Stem*	Mil	ASI 420	13	*Gasket*	Conta	EPDM / KLINGERIT
6	*Mid Cover*	Orta Kapak	GG 25 / GGG-40	14	*Top Cover*	Üst Kapak	GG 25 / GGG-40
7	*Gasket*	Conta	EPDM / KLINGERIT	15	*Mandwheel*	El Çarkı	GG 25
8	*Nozzle*	Sibob	Ms 58				

					PN 16/10			PN 25		
DN	dI	H	L	B	ØD	Øk	Weight Ağırlık Kg	ØD	Øk	Weight Ağırlık Kg
50	200	320	400	160	165	125	23	165	125	25,5
80	250	415	650	250	200	160	62,5	200	160	69
100	250	470	680	270	220	180	63,7	235	190	70
150	400	570	760	310	285	240	130	300	250	130
200	400	675	910	380	340	295	240	360	310	264
250	500	675	910	380	405	355	253	425	370	278

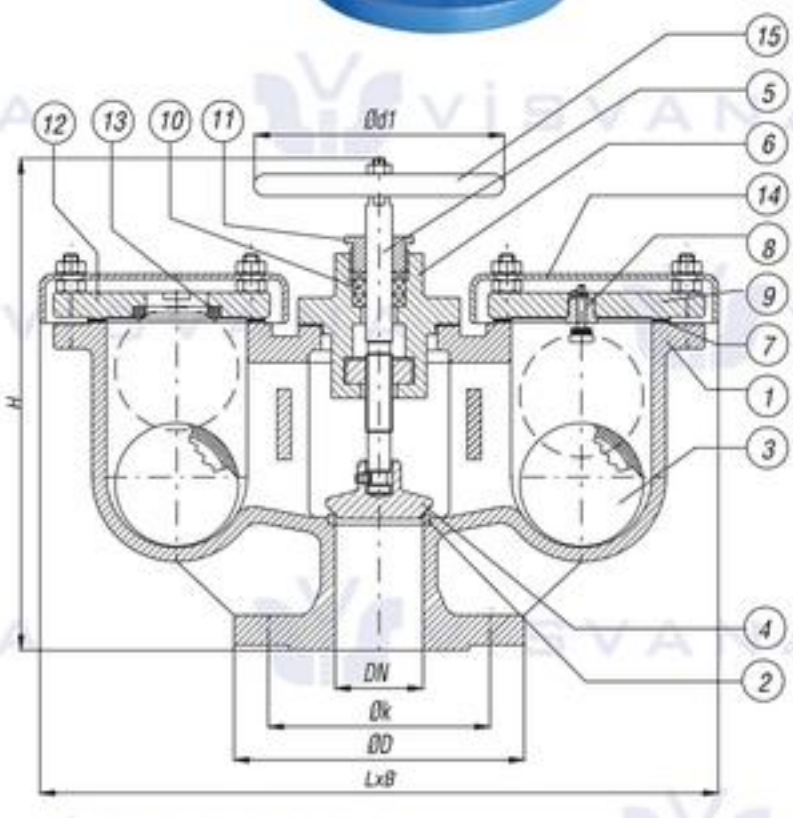

VTKD 16-25-40

THREADED SINGLE AIR VALVE

DİŞLİ TEK KÜRELİ VANTUZ

Pressure Rate / Basınç Aralığı: PN 16-25-40
Size Range / Ölçü Aralığı: DN25-DN100
Connection End / Bağlantı: EN 10226-1
Dişli - Threaded

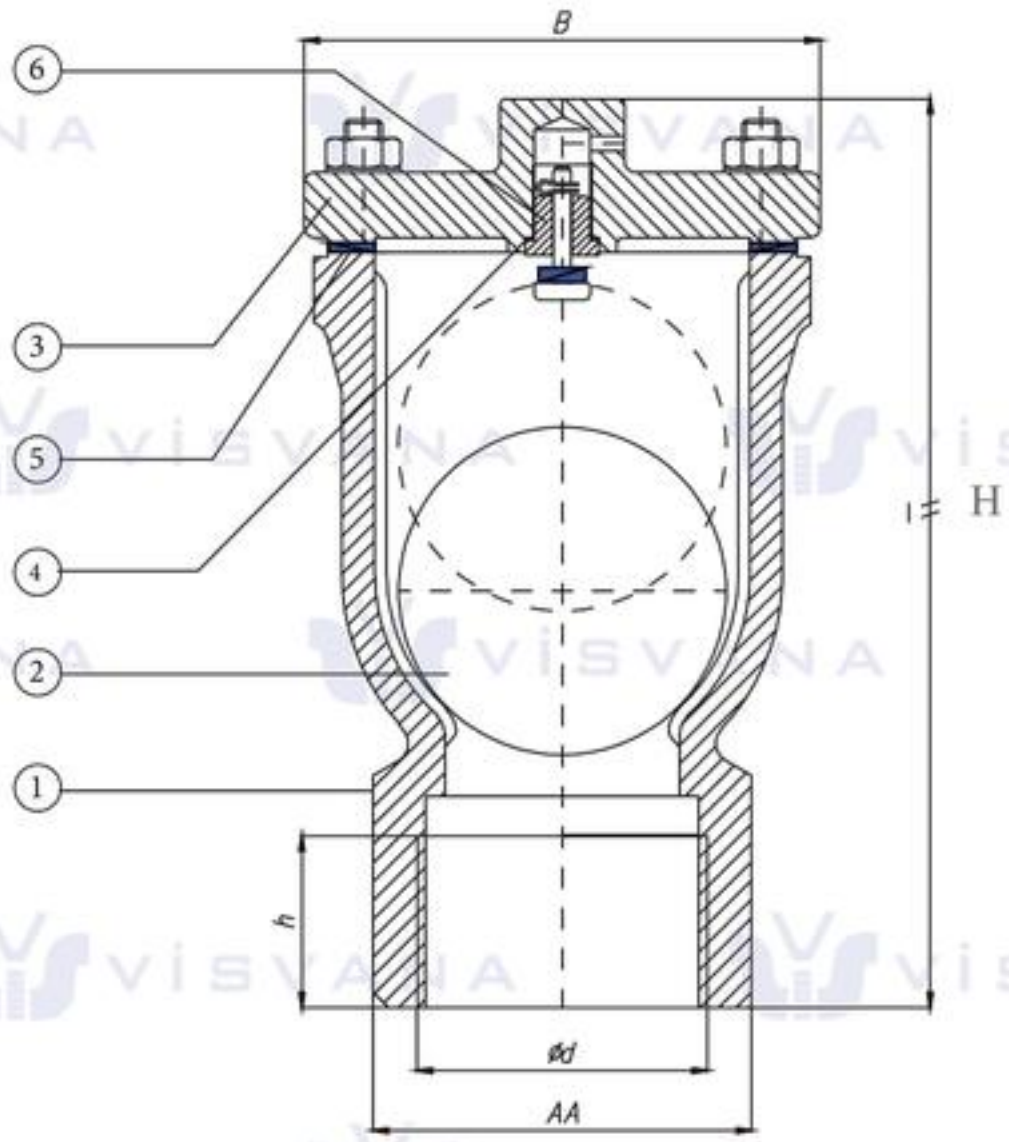

NO	PART NAME	PARÇA ADI	MATERIAL / MALZEME
1	*Body*	Gövde	GG 25 / GGG-40 / GS-C 25
2	*Ball*	Küre	PVC / PTFE
3	*Cover*	Kapak	GG 25 / GGG-40 / GS-C 25
4	*Seal*	Conta	EPDM / NBR / TEFLON
5	*Gasket*	Conta	EPDM / KLINGERIT
6	*Nozzle*	Sibob	Ms 58 / Brass

			PN 16 / 25 / 40			
DN	B	H	Ød	h	AA	Weight Ağırlık Kg
25	160	210	R 1″	25	46	5
40	160	220	R 1 1/2″	35	60	6
50	160	230	R 2″	40	75	7
80	250	290	R 3″	40	105	13
100	270	330	R 4″	45	125	15

Strainers, Foot Valves, Basket Filter

Pislik Tutucular, Dip Klapeleri, Basket Filtre

5
Strainers

Products & Technical Data

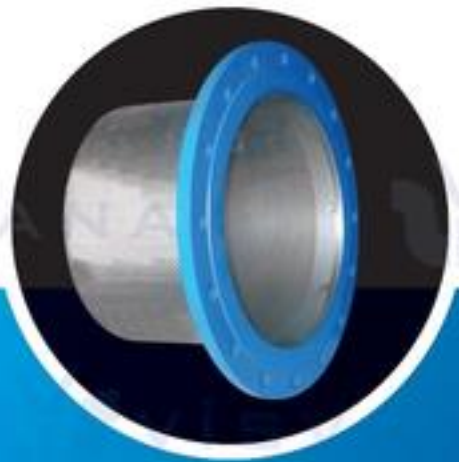

Teknik Bilgiler

www.visvana.com

VYPT-10-16-25-40

Y TYPE STRAINER
Y TİPİ PİSLİK TUTUCU

Design / Dizayn : TS 11494
Pressure Rate / Basınç Aralığı : PN 10 -16 - 25 - 40
Size Range / Ölçü Aralığı: DN15 - DN600
Face to Face / L Boyu : EN 558 Serie 1, DIN 3202 F1
Flange Ends / Flanş : EN 1092-2/B
Tests / Testler : EN 12266

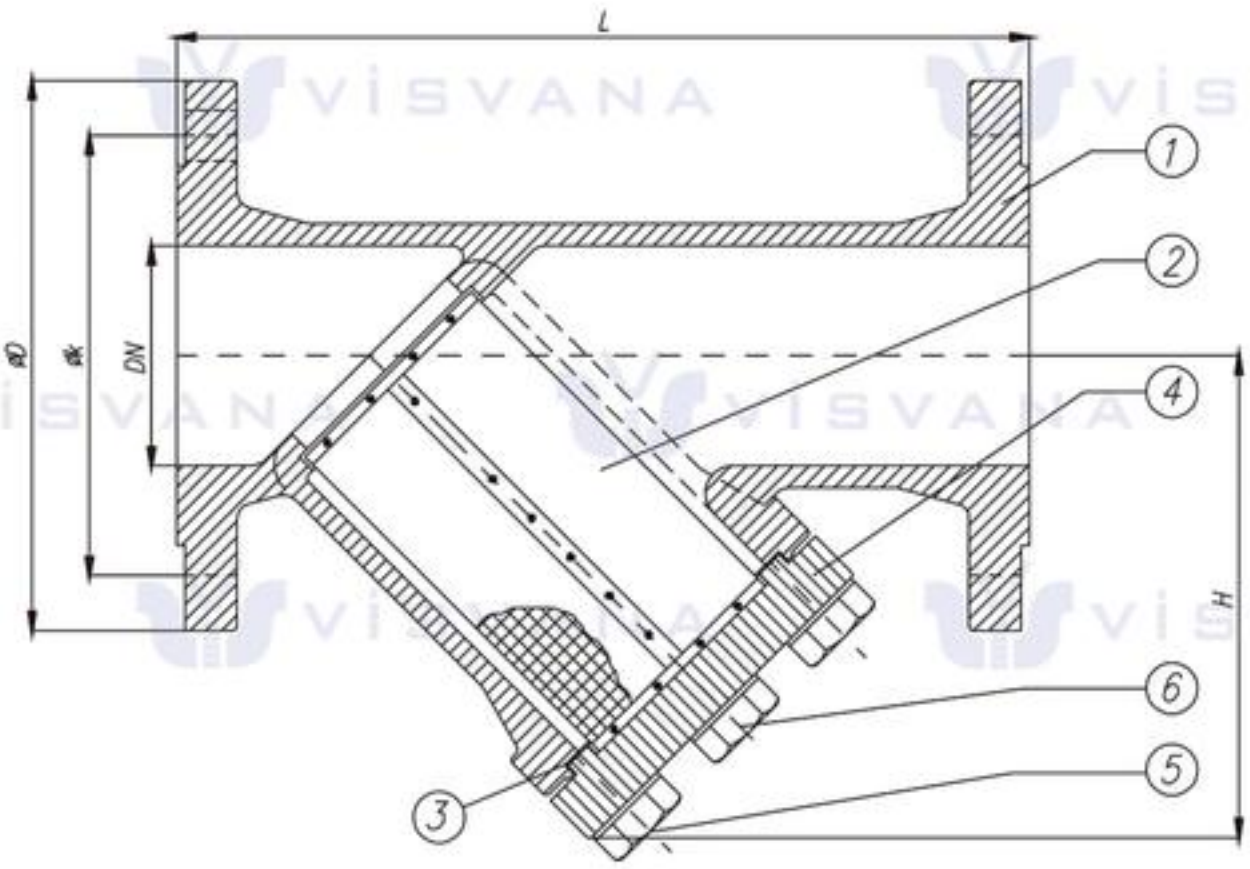

NO	PART NAME	PARÇA ADI	MATERIAL / MALZEME
1	*Body*	Gövde	GG 25 / GGG-40 / 50 / GS-C 25
2	*Filter*	Filtre	AISI 304 / AISI 316
3	*Gasket*	Conta	Kingerit / Fronzelit
4	*Bonnet*	Kapak	GG 25 / GGG-40 / 50 / GS-C 25
5	*Bolt*	Civata	5 D/SS
6	*Plug*	Tapa	GG 25 / Ms 58 / SS

Nominal Pressure / Anma Basıncı	PN	PN 10 / 16 / 25 / 40																		
Nominal Diameter / Anma Çapı	DN	15	20	25	32	40	50	65	80	100	125	150	200	250	300	350	400	450	500	600
Valve Dimensions / Vana Boyutları DIN3202/2-F1 TS 11 494 DIN EN 558-1/20	L	130	150	160	180	200	230	290	310	350	400	480	600	730	850	980	1100	1200	1250	1450
	H(min)	60	70	80	85	120	135	185	205	245	290	330	390	530	560	620	710	800	985	1100
	H(max)	100	120	140	150	190	220	310	340	410	470	530	620	850	1050	1100	1210	1400	1700	1900
Flange Dimensions / Flanş Ölçüleri DIN EN 1092-1-2 PN10	D	95	105	115	140	150	165	185	200	220	250	285	340	395	445	505	565	615	670	780
	k	65	75	85	100	110	125	145	160	180	210	240	295	350	400	460	515	565	620	725
Flange Dimensions / Flanş Ölçüleri DIN EN 1092-1-2 PN16	D	95	105	115	140	150	165	185	200	220	250	285	340	405	460	520	580	640	715	840
	k	65	75	85	100	110	125	145	160	180	,210	240	295	355	410	470	525	585	650	770
Flange Dimensions / Flanş Ölçüleri DIN EN 1092-1-2 PN25	D	95	105	115	140	150	165	185	200	235	270	300	360	425	485	555	620	670	730	845
	k	65	75	85	100	110	125	145	160	190	220	250	310	370	430	490	550	600	660	770
Flange Dimensions / Flanş Ölçüleri DIN EN 1092-1-2 PN40	D	95	105	115	140	150	165	185	200	235	270	300	375	450	515	580	660	685	755	890
	k	65	75	85	100	110	125	145	160	190	220	250	320	385	450	510	585	610	670	795
Weight / Ağırlık (~ for iron)	kg	1,97	2,98	3,7	5,6	7,6	9,8	15,7	24,9	34	43	54	118	177	275	310	418	495	1100	1300

STAINLESS STEEL STRAINER
PASLANMAZ PİSLİK TUTUCU

VSSYPT-40

Pressure Rate / Basınç Aralığı : PN 40
Size Range / Ölçü Aralığı : 1/2" - 2"
Material / Malzeme : SS.304 / SS.316
Tests / Testler : EN 12266 & API 598

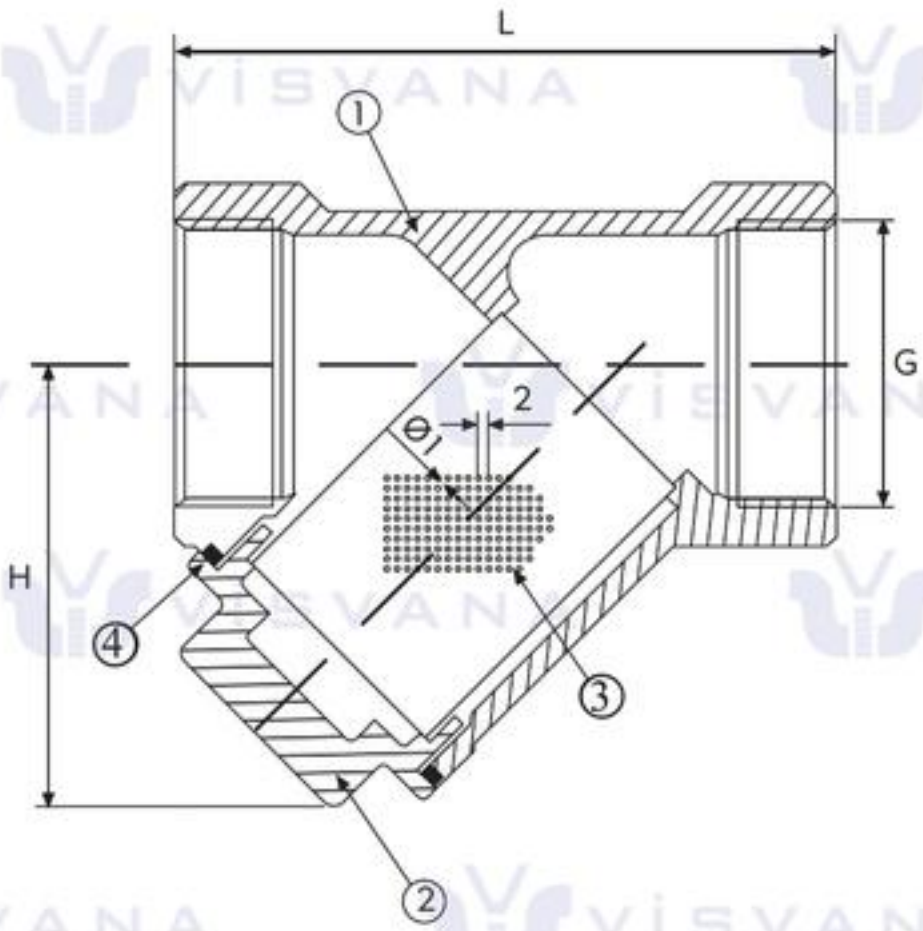

NO	PART NAME	PARÇA ADI	MATERIAL / MALZEME
1	*Body*	Gövde	Stainless Steel AISI 304 / 316
2	*Bonnet*	Kapak	Stainless Steel AISI 304 / 316
3	*Filter*	Filtre	Stainless Steel AISI 304 / 316
4	*Gasket*	Conta	PTFE

PRESSURE - TEMPERATURE	
°C	-10.....120
PN	16

Nominal Pressure / Anma Basıncı	Stainless Steel Y-Type Strainer PN 40						
Nominal Diameter / Anma Çapı	DN	15	20	25	32	40	50
Valve Dimensions / Vana Boyutları	G	1/2"	3/4"	1"	1-1/4"	1-1/2"	2"
	L	65	80	90	105	120	140
	k	51	60	72	77	87	103
Weight / Ağırlık (~ for SS)	kg	0,23	0,36	0,69	0,78	1,22	1,79

VTPT-16

T TYPE STRAINER
T TİPİ PİSLİK TUTUCU

Design / Dizayn : TS 11494
Pressure Rate / Basınç Aralığı : PN 6 -10 -16
Size Range / Ölçü Aralığı: DN15 - DN600
Face to Face / L Boyu : EN 558 Serie 1, DIN 3202 F1
Flange Ends / Flanş : EN 1092-2/B
Tests / Testler : EN 12266

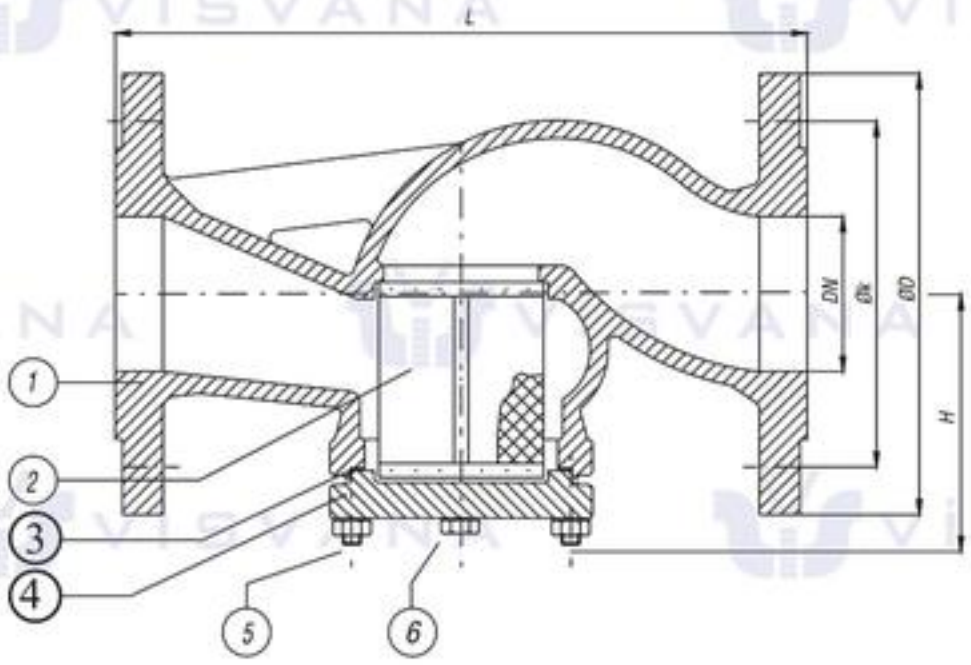

NO	PART NAME	PARÇA ADI	MATERIAL / MALZEME
1	*Body*	Gövde	GG 25/GGG-40/50
2	*Filter*	Filtre	AISI 304
3	*Gasket*	Conta	Klingerit/Franzelit
4	*Bonnet*	Kapak	GG 25/GGG-40/50
5	*Bolt*	Civata	5.6 / A2, A4
6	*Plug*	Tapa	GG 25/Ms 58/SS

Nominal Pressure / Anma Basıncı	PN	6-10-16													
Nominal Diameter / Anma Çapı	DN	15	20	25	32	40	50	65	80	100	125	150	200	250	300
Valve Dimensions / Vana Boyutları TS 11494 DIN3202/2-F1	L	130	150	160	180	200	230	290	310	350	400	480	600	730	850
	H(min)	75	75	85	90	95	100	135	145	170	205	225	270	290	360
	H(max)	115	125	150	160	170	185	250	280	330	385	400	500	580	700
Mesh / Filtre Özellikleri	Ba	52	62	72	77	97	112	168	188	218	243	281	317	485	520
	S	25	25	29	38	50	60	65	85	105	130	160	210	260	310
	v	0,35				0,40				0,50					
	W	0,65				0,85				0,93					
Plug Dimensions / Tapa Ölçüleri	D1						R7/8"								R1"
Flange Dimensions / Flanş Ölçüleri TS 810 / DIN 2501 PN 6	D	80	90	100	120	130	140	160	190	210	240	265	320	375	400
	k	55	65	75	90	100	110	130	150	170	210	225	280	335	395
Flange Dimensions / Flanş Ölçüleri TS 810 / DIN 2501 PN 10	D	95	105	115	140	150	165	185	200	220	250	285	340	395	445
	k	65	75	85	100	110	125	145	160	180	210	240	295	350	400
Flange Dimensions / Flanş Ölçüleri TS 810 / DIN 2501 PN 16	D	95	105	115	140	150	165	185	200	220	250	285	340	405	460
	k	65	75	85	100	110	125	145	160	180	210	240	295	355	410
Weight / Ağırlık (~ for iron)	kg	1,97	2,98	3,7	5,6	7,6	9,8	15,7	24,9	34	43	54	118	177	275

Not: DN600'a kadar üretimimiz vardır.
Note: We have production till DN600.

FOOT VALVES WITH SPRING

YAYLI DİP KLAPESİ (AYAK VANASI)

VDKF-10-16

Tip-1 / Type-1

Pressure Rate / Basınç Aralığı : PN 10 -16 / Class 150
Size Range / Ölçü Aralığı: DN40 - DN600
Flange Ends / Flanş : EN 1092-2/B - ASME B16.5
Tests / Testler : EN 12266 & API 598

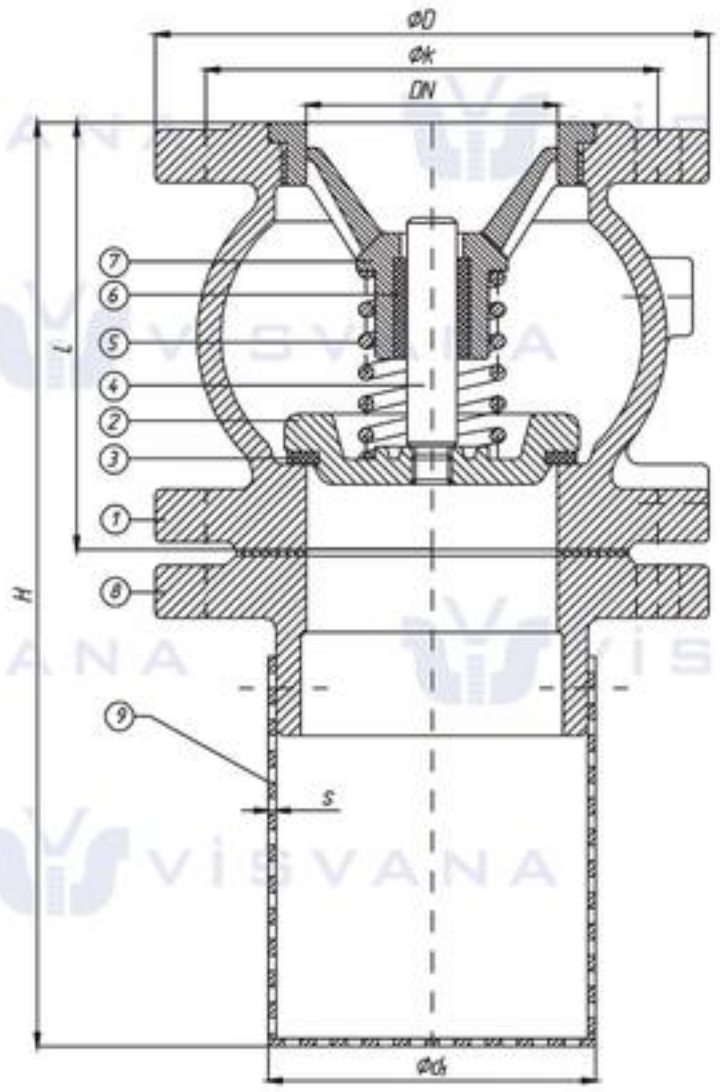

NO	PART NAME	PARÇA ADI	MATERIAL / MALZEME	NO	PART NAME	PARÇA ADI	MATERIAL / MALZEME
1	*Body*	Gövde	GGG25/GGG-40,3/G-SC25/Bronze/SS(Pas.Çelik)	6	*Ring*	Yüzük	SS/Bronze/PTFE
2	*Disc*	Klape	GGG 25/GGG-40/SS/Bronze	7	*Guide*	Mil yatağı	GG 25/GGG-40/G-SC 25
3	*Seats*	Sızdırmazlık el.	NBR/EPDM/SS/Bronze	8	*Flange*	Flanş	GGG25/GGG-40,3/G-SC25/Bronze/SS(Pas.Çelik)
4	*Spindle*	Mil	AISI 420-304-316/CuSn8	9	*Basket*	Filtre	AISI 304-316/Brass/Copper
5	*Spring*	Yay	AISI 302(1,4310)				

Nominal Pressure / Anma Basıncı	PN	10 / 16													
Nominal Diameter / Anma Çapı	DN	40	50	65	80	100	125	150	200	250	300	350	400	500	600
Valve Dimensions / Vana Boyutları	L	85	100	120	140	170	200	230	288	354	395	472	560	670	710
	H	185	200	245	280	320	400	450	510	600	650	735	860	1020	1400
	Ød	71	81	101	111	140	161	190	235	295	345	410	454	554	654
	S	1,5						2					2,5		
Resistance Coefficient	&	1,80	1,00	1,10	1,30	1,00	1,00	1,00	2,00	1,50	2,10	2,05	2,10	2,05	2,05
Kv Values	Kv	47	99	159	222	396	619	890	1120	2010	2459	2843	4280	6914	9533
Flange Dimensions DIN EN 1092 PN 10	D	150	165	185	200	220	250	285	340	395	445	505	565	670	780
	k	110	125	145	160	180	210	240	295	350	400	460	515	620	725
Flange Dimensions DIN EN 1092 PN 16	D	150	165	185	200	220	250	285	340	405	460	520	580	715	840
	k	110	125	145	160	180	210	240	295	355	410	470	525	650	770
Flange Dimensions ASA Class 150	D	150	152,5	178	190,5	229	254	279,5	343	406,5	483	533,5	597	699	813
	k	110	120,7	139,7	152,4	190,5	216	241,3	298,5	362	431,4	476,3	539,8	635	749,3
Weight / Ağırlık (~ for iron)	kg	6,2	8,8	11	14	19,5	30,5	39,5	64,5	110	156	250	342	590	630

VDKF-10-16

Tip-2 / Type-2

FOOT VALVES WITHOUT SPRING

YAYSIZ DİP KLAPESİ

Designe / Dizayn : DIN 3259
Pressure Rate / Basınç Aralığı : PN 10 -16
Size Range / Ölçü Aralığı: DN50 - DN600
Flange Ends / Flanş : EN 1092-2/B
Tests / Testler : EN 12266

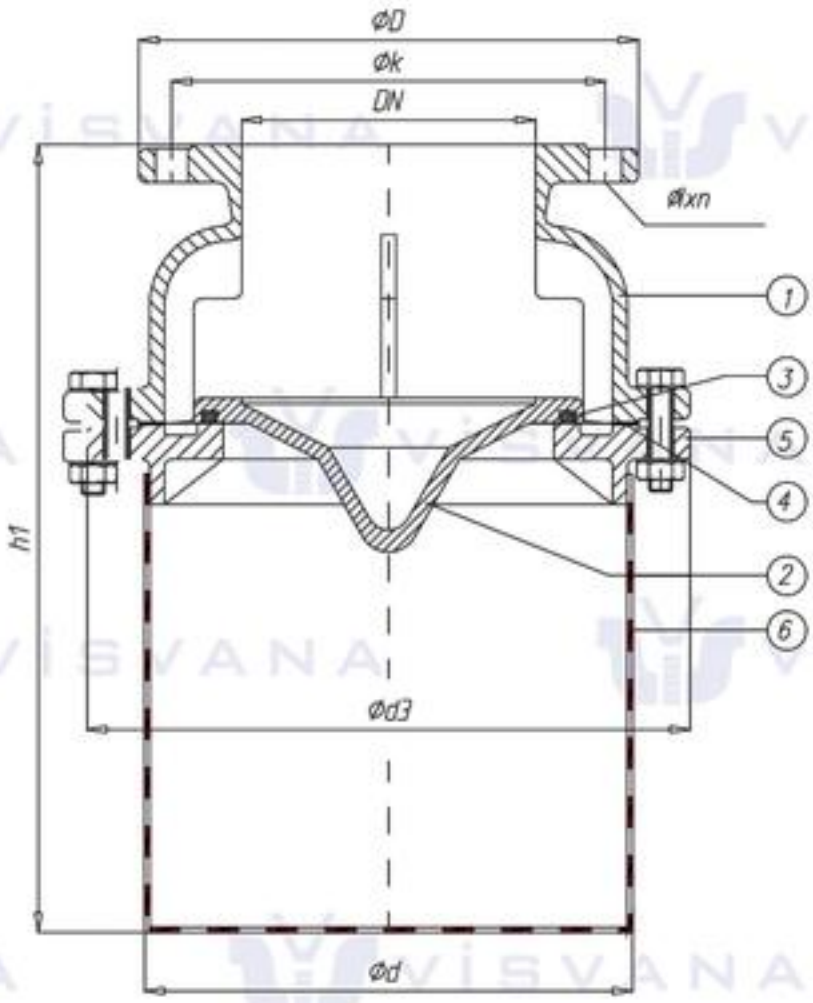

NO	PART NAME	PARÇA ADI	MATERIAL / MALZEME
1	*Body*	Gövde	GG 25 / GGG-40.3/GS-C 25
2	*Disc*	Klape	GG 25 / GGG-40.3/GS-C 25/Bronze/SS
3	*O-Ring*	O-Ring	NBR/EPDM
4	*Gasket*	Conta	NBR/EPDM
5	*Flange*	Flanş	GG 25 / GGG-40.3/GS-C 25
6	*Basket*	Filtre	AISI 304/St-37(Gal. Zn)

Nominal Pressure / Anma Basıncı	PN	10 / 16												
Nominal Diameter / Anma Çapı	DN	50	65	80	100	125	150	200	250	300	350	400	500	600
Valve Dimensions / Vana Boyutları DIN 3259	Ød3	180	190	210	240	280	335	365	405	505	555	675	775	875
	Ød	77	92	127	142	188	217	282	325	420	470	520	620	520
	h1	175	215	265	315	335	410	470	500	600	750	800	950	1250
Flange Dimensions DIN EN 1092 PN 10	D	165	185	200	220	250	285	340	395	445	505	565	670	780
	k	125	145	160	180	210	240	295	350	400	460	515	620	725
	Øxn	Ø18x4		Ø18x8			Ø22x8		Ø22x12		Ø22x16	Ø26x16	Ø26x20	Ø30x20
Flange Dimensions DIN EN 1092 PN 16	D	165	185	200	220	250	285	340	395	445	505	565	715	840
	k	125	145	160	180	210	240	295	350	400	460	515	650	770
	Øxn	Ø18x4		Ø18x8			Ø22x8	Ø22x12	Ø26x12		Ø26x16	Ø30x16	Ø33x20	Ø36x20
Weight / Ağırlık (~ for iron)	kg	7	9	12	19	23	40	65	95	170	230	300	450	655

STRAINER BASKET
(Suction Strainer)
KREPİN

VKF-10

Pressure Rate / Basınç Aralığı: PN10-40
Size Range / Ölçü Aralığı: DN40-DN400
DN450-DN700 (PN 2,5)
Design / Dizayn: DIN 3247

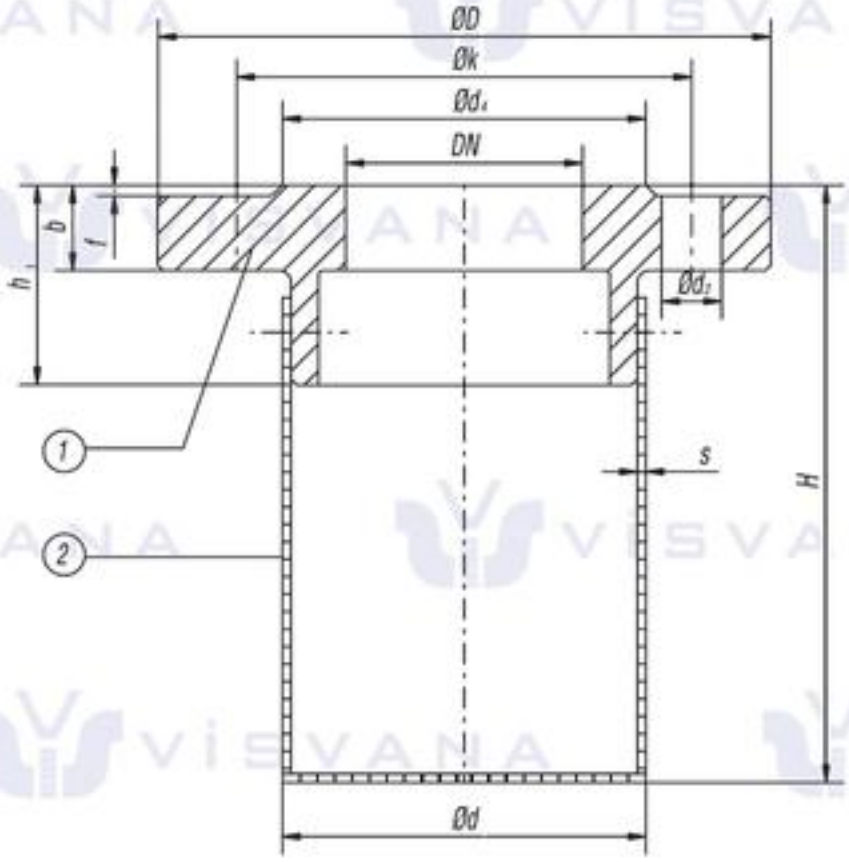

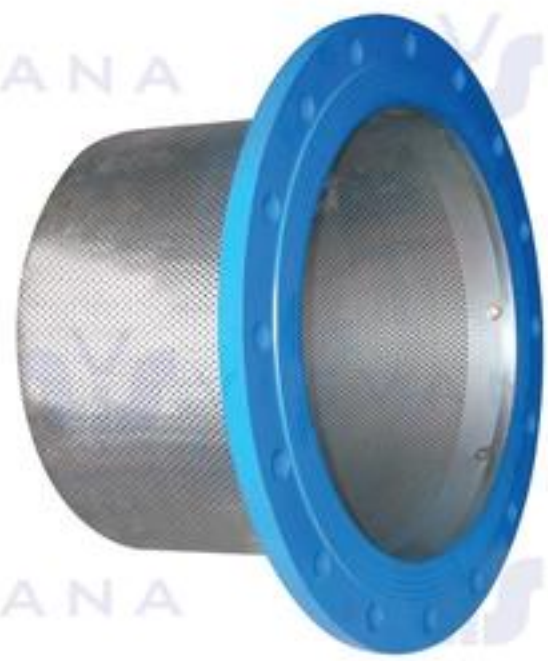

NO	PART NAME	PARÇA ADI	MATERIAL / MALZEME
1	Body	Gövde	GG 25 / RSt 37-2
2	Basket	Filtre	RSt 37-2 (gal.Zn) / 304

Nominal Diameter	Flange Flanş			Facing Fatura		Bolt Dimensions Civatalar			Filter Filtre			
Anma Çapı DN	ØD	Øk	b	Ød4	t	Delik Adedi Holes Of	Ød2	Civata Çapı Bolt Dia.	Ød1	S	h1	H
40	150	110	18	84	2	4	18	M16	71	1,5	50	130
50	165	125	20	99					81			
65	185	145		118		8			101			160
80	200	160		132					111			180
100	220	180	22	156					140			195
125	250	210		184					161			250
150	285	240	24	211			22	M20	190	2		285
200	340	295		266					235		60	385
250	395	350	26	319		12			295			460
300	445	400		370					345			530
350	505	460		429		16			410			600
400	565	515		480			26	M24	454	2,5		715
450	615	565	28	530		20			474		85	880
500	670	620		582			29,5	M27	554			915
600	780	725	34	682					654			1030
700	895	840		794	5	24			774		95	1215

VCVD-10

STRAIGHT TYPE MUD BOX
DÜZ TİP ÇAMUR KUTUSU

Face to Face / L Boyu : EN 558 Serie 1,
DIN 3202 F1

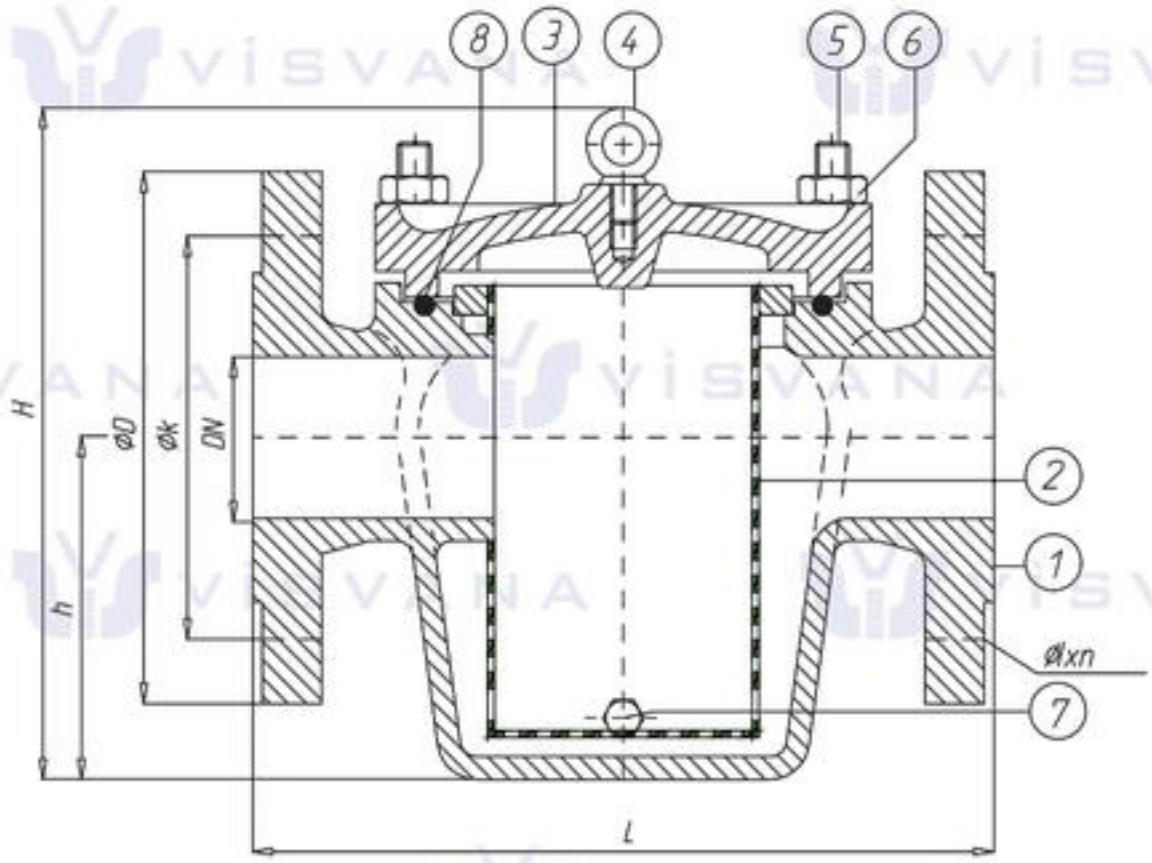

NO	*PART NAME*	PARÇA ADI	*MATERIAL* / MALZEME
1	*Body*	Gövde	GG-25 / GGG-40 / GS-C 25 / Bronze / SS 304 / SS 316
2	*Screen*	Filtre	AISI 304 / AISI 316 / Copper
3	*Bonnet*	Kapak	GG-25 / GGG-40 / GS-C 25 / Bronze / SS 304 / SS 316
4	*Ring Screw*	Mapa	St / SS
5	*Stud*	Saplama	St / SS
6	*Nut*	Somun	St / SS
7	*Plug*	Tapa	St / SS / Brass
8	*O-Ring*	O-Ring	NBR

Nominal Pressure / Anma Basıncı	PN	PN 4												PN 2,5	
Nominal Diameter / Anma Çapı	DN	40	50	65	80	100	125	150	200	250	300	350	400	500	600
Valve Dimensions / Vana Boyutları DIN 3202 F1	L	200	230	290	310	350	400	480	600	600	700	800	840	1000	1100
	H	205	225	260	310	345	395	465	565	610	675	790	900	1100	1100
	h	95	106	134	156	185	225	265	335	345	390	425	470	525	670
Flange Dimensions / Flanş Ölçüleri DIN EN 1092 PN 10	D	150	165	185	200	220	250	285	340	400	455	505	565	670	780
	k	110	125	145	160	180	210	240	295	350	400	460	515	620	725
	Øxn	Ø18x4			Ø18x8			Ø22x8		Ø22x12		Ø22x16	Ø26x16	Ø26x20	Ø30x20
Weight / Ağırlık	kg	14	19	26	33	45	60	86	147	180	245	325	415	550	815
Flange Dimensions / Flanş Ölçüleri DIN EN 1092 PN 16	D	150	165	185	200	220	250	285	340	400	455	520	580	715	840
	k	110	125	145	160	180	210	240	295	355	410	470	525	650	770
	Øxn	Ø18x4			Ø18x8			Ø22x8	Ø22x12	Ø26x12		Ø26x16	Ø30x16	Ø33x20	Ø36x20
Weight / Ağırlık (~ for iron)	kg	14	19	26	33	45	60	86	150	185	250	330	420	560	825

Ball Valves

Küresel Vanalar

Products & Technical Data

Teknik Bilgiler

www.visvana.com

VKV-16

2 PCS DESIGN BALL VALVE FULL BORE

2 PARÇALI KÜRESEL VANA TAM GEÇİŞLİ

Dimensions / Boyutlar: DIN 3357
Flange Ends / Flanş: DIN EN 1092-1
Test: API 598 / DIN EN 12266
Face to Face / L Boyu: DIN EN 558-1-14

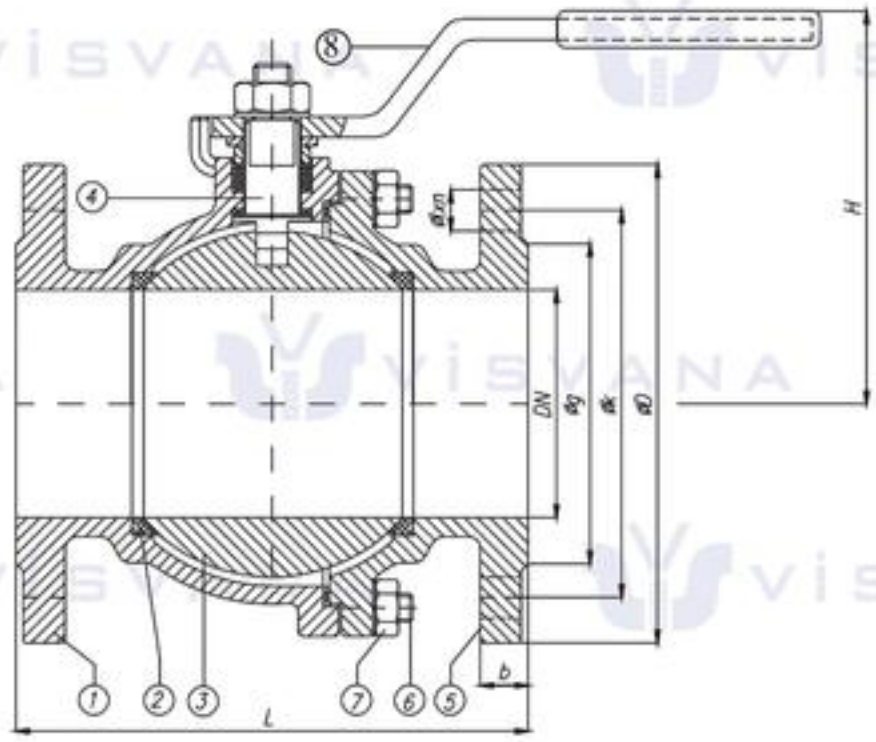

NO	PART NAME	PARÇA ADI	MATERIAL / MALZEME
1	*Body*	Gövde	GG25
2	*Body Seat*	Gövde Burcu	Teflon / PTFE
3	*Ball*	Küre	SS420/SS304
4	*Stem*	Mil	Paslanmaz Çelik / Stainless Steel SS420
5	*Bonnet*	Kapak	GG25
6	*Stud*	Saplama	5.6 / 8.8
7	*Nut*	Somun	5 / 8
8	*Lever*	Kol	Çelik / Steel

Valve Dimensions / Boyut Ölçüleri DIN 3357			PN 16 *Flange Dimensions* / Flanş Ölçüleri DIN EN 1092					*Weight* / Ağırlık
DN	L	H	ØD	Øk	Øg	b	ØLxn	Kg.
32	130	110	140	100	78	18	Ø18x4	9
40	140	160	150	110	88	18		13
50	150	160	165	125	102	18		19
65	170	170	185	145	122	18		29
80	180	210	200	160	138	20	Ø18x8	40
100	190	240	220	180	158	20		55
125	200	280	250	210	188	22		80
150	210	330	285	240	212	22	Ø22x8	120
200	230	400	340	295	268	24	Ø23x12	175

3 PCS DESIGN BALL VALVE FULL BORE

3 PARÇALI TAM GEÇİŞLİ KÜRESEL VANA

VTKF-16-25-40

Design / Dizayn : DIN 3357-2
Pressure Rate / Basınç Aralığı : PN 16 -25 -40
Size Range / Ölçü Aralığı: DN15 - DN150
Face to Face / L Boyu : EN 558 Serie 1, DIN 3202 F1
Flange Ends / Flanş : EN 1092
Tests / Testler : EN 12266 & API 598

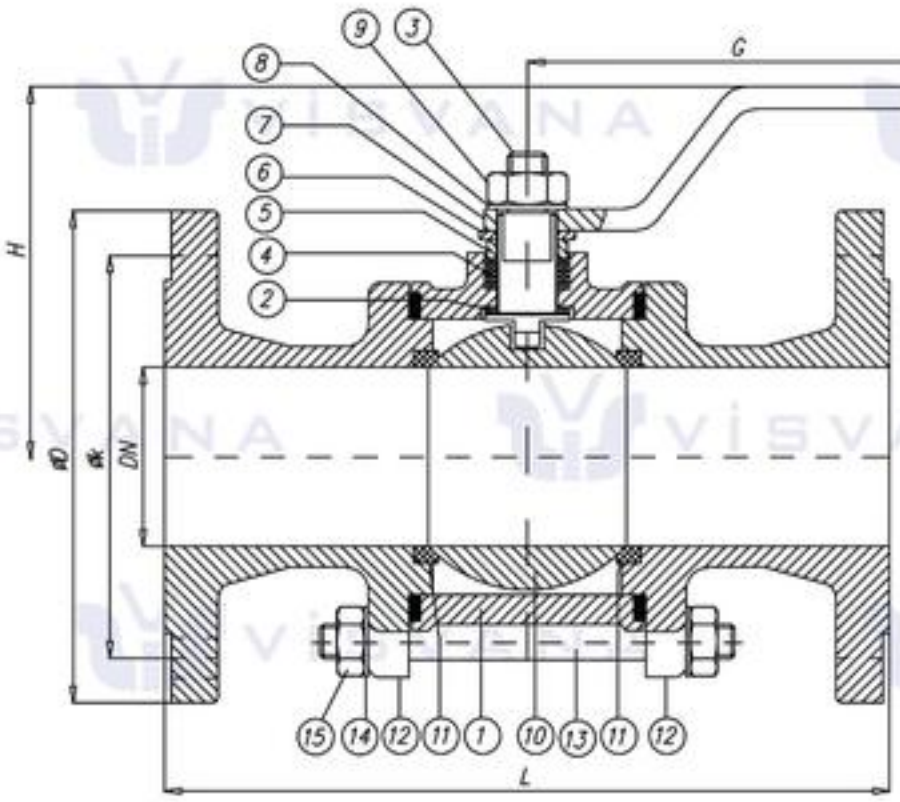

NO	PART NAME	PARÇA ADI	MATERIAL / MALZEME	NO	PART NAME	PARÇA ADI	MATERIAL / MALZEME
1	*Body*	Gövde	GG 25 / GGG-40 SS / GS-C 25 / Bronze	9	*Nut*	Somun	5 D/SS
2	*Gasket*	Conta	PTFE	10	*Ball*	Küre	AISI 304 / AISI 316 / Bronze
3	*Stem*	Mil	AISI 304 / AISI 316	11	*Seat*	Ring	PTFE
4	*Gasket*	Conta	PTFE	12	*Flange*	Flanş	GG 25 / GGG-40 SS / GS-C 25 / Bronze
5	*Gland Bush*	Baskı Burcu	Ms 58 / AISI 304	13	*Stud*	Saplama	5.6 /A2
6	*Stopper*	Hareket Pulu	St 37 / AISI 304	14	*Washer*	Rondela	St 37 / AISI 304
7	*Lever*	Kol	St 37 / AISI 304	15	*Nut*	Somun	5/A2
8	*Washer*	Rondela	St 37 / AISI 304				

Nominal Diameter / Anma Çapı	DN	15	20	25	32	40	50	65	80	100	125	150
Valve Dimensions / Vana Boyutları DIN EN 558-1-1 DIN 3357-2	L	130	150	160	180	200	230	290	310	350	400	350
	G max.	160	180	180	250	300	320	350	450	500	700	700
	H max.	95	110	115	130	135	145	155	195	220	265	300
Flange Dimensions / Flanş Ölçüleri DIN EN 1092-1-2 PN 10-16	D	95	105	115	140	150	165	185	200	220	250	285
	k	65	75	85	100	110	125	145	160	180	210	240
Flange Dimensions / Flanş Ölçüleri DIN EN 1092-1-2 PN 25	D	95	105	115	140	150	165	185	200	235	270	300
	k	65	75	85	100	110	125	145	160	190	220	250
Flange Dimensions / Flanş Ölçüleri DIN EN 1092-1-2 PN 40	D	95	105	115	140	150	165	185	200	235	270	300
	k	65	75	85	100	110	125	145	160	190	220	250
Weight / Ağırlık (~ for iron)	kg	2,3	3,8	4	6,5	8,55	13,55	20,15	29,5	40,3	68	86

VKRF-16

BALL VALVES REDUCED BORE
REDÜKSİYON GEÇİŞLİ KÜRESEL VANA

Design / Dizayn : DIN 3357, TS 3148/19
Pressure Rate / Basınç Aralığı : PN 16
Size Range / Ölçü Aralığı: DN20 - DN250
Face to Face / L Boyu : EN 558 Serie 1, DIN 3202 F1
Flange Ends / Flanş : EN 1092
Tests / Testler : EN 12266 & API 598

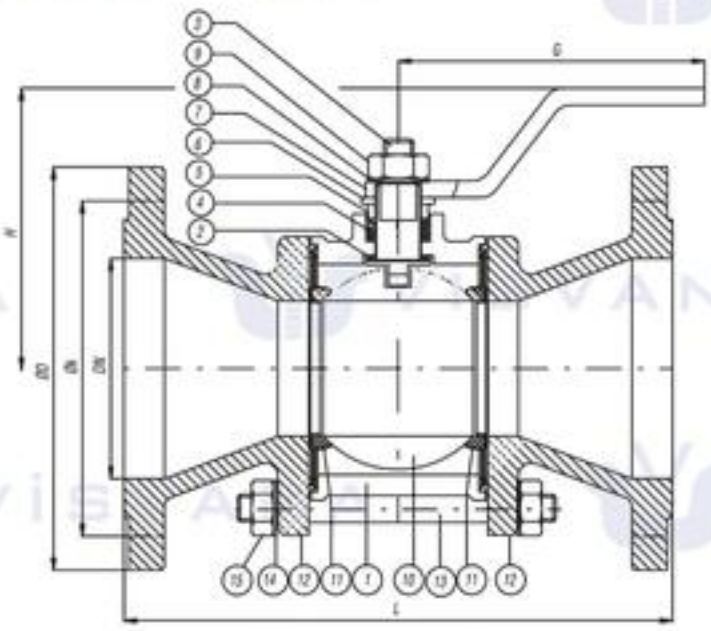

DIN 20/15.....DN150/125 DIN 3202/2-F1

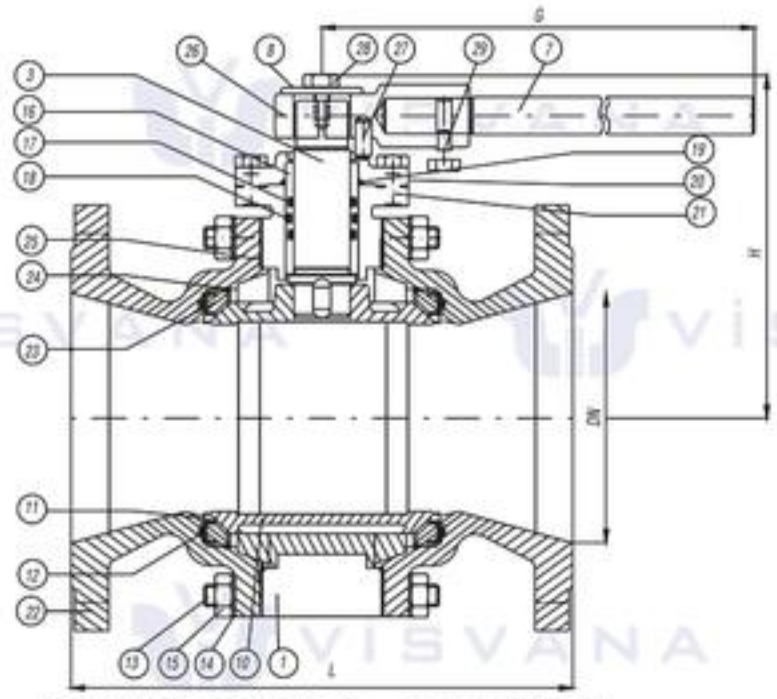

DN200/150...DN250/200 DIN 3202/2-F5

NO	PART NAME	PARÇA ADI	MATERIAL / MALZEME	NO	PART NAME	PARÇA ADI	MATERIAL / MALZEME
1	*Body*	Gövde	GG 25 / GGG-40-50	16	*Stem Bush*	Mil Yatağı	PTFE
2	*Gasket*	Alt Teflonu	PTFE	17	*O-Ring*	O-Ring	EPDM
3	*Stem*	Mil	AISI 1304 / AISI 1316	18	*O-Ring*	O-Ring	EPDM
4	*Gasket*	Teflon Ring	PTFE	19	*O-Ring*	O-Ring	EPDM
5	*Gland Bush*	Baskı Burcu	Ms 58 / AISI 1304	20	*Bonnet*	Kapak	GG 25 / GGG-40-50
6	*Stopper*	Hareket Pulu	St 37 / AISI 1304	21	*Bolt*	Civata	5 D /SS
7	*Lever*	Kol	St 37 / AISI 1304	22	*O-Ring*	O-Ring	EPDM
8	*Washer*	Rondela	St 37 / AISI 1304	23	*Support Ring*	Destek Ringi	GG 25 / GGG-40-50
9	*Nut*	Somun	5 D/SS	24	*Saffety Wire*	Emniyet Teli	AISI 1304
10	*Ball*	Küre	AISI 304	25	*Gasket*	Conta	Klingerit / Franzelit
11	*Spring Seal*	Tabak Yay	AISI 304 + PTFE	26	*Lever Adaptor*	Kol Adaptörü	GG 25 / GGG-40-50
12	*Flange*	Yan Flanş	GG 25 / GGG-40-50	27	*Pin*	Hareket Pimi	AISI 1304
13	*Stud*	Saplama	5.6/SS	28	*Washer*	Rondela	St 37 / AISI 1304
14	*Washer*	Rondela	St 37 / 304	29	*Bolt*	Civata	5 D /SS
15	*Nut*	Somun	5 D /SS				

Nominal Diameter / Anma Çapı	DN	20	25	32	40	50	65	80	100	125	150	200	250
Valve Dimensions / Vana Boyutları TS 3148/19 DIN 3357	L	150	160	180	200	230	290	310	350	400	450	400	450
	G max.	160	180	180	250	300	320	350	450	500	700	700	1000
	H max.	95	110	115	130	135	145	155	195	220	265	300	380
Flange Dimensions / Flanş Ölçüleri TS 810 / DIN 2501 PN 16	D	105	115	140	150	165	185	200	220	250	285	340	405
	k	75	85	100	110	125	145	160	180	210	240	295	355
Weight / Ağırlık (~ for iron)	kg	2,7	3,5	5,4	6,8	9,55	15,15	21,6	30,2	44,8	72,2	100	141

THREADED BALL VALVE (FULL BORE-REDUCED BORE)

DİŞLİ KÜRESEL VANALAR (TAM GEÇİŞLİ - REDÜKSİYON GEÇİŞLİ)

VTDK-16

Pressure Rate / Basınç Aralığı: PN16-40-63
Size Range / Ölçü Aralığı: 1/2" - 2 1/2"
3/8"- 1 1/2"
Temperature / Sıcaklık: -30 °C +250 °C
Ends / Uç bağlantısı: ISO 228 / 1

NO	PART NAME	PARÇA ADI	MATERIAL / MALZEME
1	*Body*	Gövde	GG 25 / GGG-40/GS-C 25
2	*Ball*	Küre	1.4301
3	*Flange*	Flanş	GG 25 / GGG-40/GS-C 25
4	*Spindle*	Mil	1.4021
5	*Seat*	Tabak Yay	PTFE+1.4301
6	*Packing*	Conta	PTFE+1.4301
7	*Gland*	Baskı	Ms 58
8	*Stopper*	Hareket Pulu	St 37
9	*Stud*	Saplama	5,6
10	*Lever*	Kol	St
11	*Nut*	Somun	8

	DN	Dimensions / Boyutlar			Bağlantı Özellikleri				Diameter Ağırlık kg
		L	H	G	AA	d1	d2	a	
Reduced Bore Redüksiyon Geçişli	1/2"/10	70	89	130	27	10	R 1/2"	15,5	0,65
	3/4"/15	75	93	130	32	15	R 3/4"	16,0	1,3
	1"/20	95	110	160	41	20	1"	19,0	1,5
	1 1/4"/25	105	113	160	50	25	R 1 1/4"	19,0	2,2
	1 1/2"/32	110	127	200	55	32	R 1 1/2"	19,0	3,8
	2"/40	125	134	200	70	40	R 2"	20,0	4,5
	2 1/2"/50	188	165	280	95	50	R 2 1/2"	38,0	11,0
Full Bore Tam Geçişli	1/4"/10	70	89	130	27	10	R 1/4"	10,5	0,60
	3/8"	70	89	130	27	10	R 3/8"	11,5	0,60
	1/2"	75	93	130	32	15	R 1/2"	15,5	0,70
	3/4"	95	110	160	41	20	R 3/4"	16,0	1,2
	1"	105	113	160	50	25	R 1"	19,0	1,8
	1 1/4"	110	127	200	55	32	R 1 1/4"	19,0	3,3
	1 1/2"	125	134	200	70	40	R 1 1/2"	19,0	3,7
	2"	150	141	280	75	50	R 2"	20,0	5,0
Socketed Soketli	3/8"	70	89	130	27	10	17,6	10	0,70
	1/2"	75	93	130	32	15	21,8	10	1,0
	3/4"	95	110	160	41	20	27,1	13	1,5
	1"	105	113	160	50	25	33,8	13	3,0
	1 1/4"	110	127	200	55	32	42,6	13	3,5
	1 1/2"	125	134	200	70	40	48,7	13	4,4

SOKETLİ
SOCKEDED VTSK-16

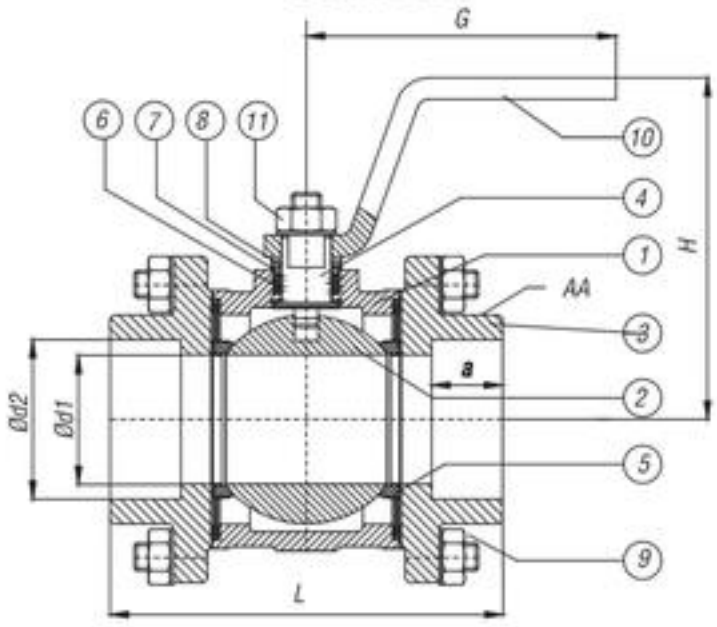

REDUKSİYON GEÇİŞLİ
REDUCED BORE VRDK-16

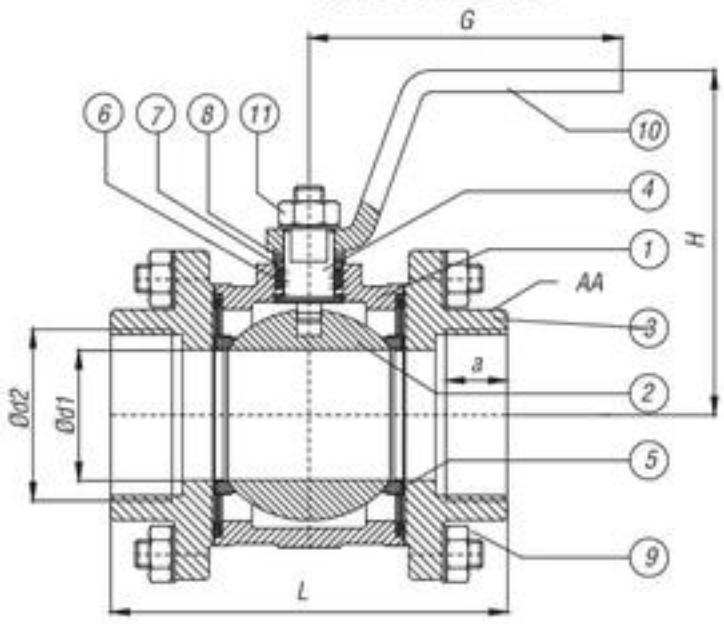

TAM GEÇİŞLİ
FULL BORE VTDK-16

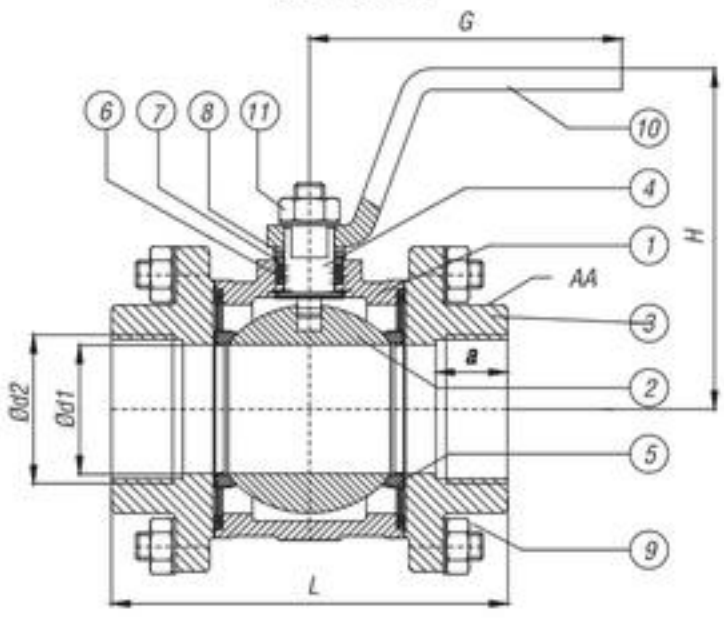

VTKF-16-25-40

STAINLESS STEEL BALL VALVE FULL BORE

PASLANMAZ ÇELİK KÜRESEL VANA TAM GEÇİŞLİ KÜRESEL VANA

Design / Dizayn : DIN 3357-2, TS 3148/17
Pressure Rate / Basınç Aralığı : PN 10 -16 -25 -40
Size Range / Ölçü Aralığı: DN15 - DN150
Face to Face / L Boyu : EN 558 Serie 1, DIN 3202 F1
Flange Ends / Flanş : EN 1092
Tests / Testler : EN 12266 & API 598

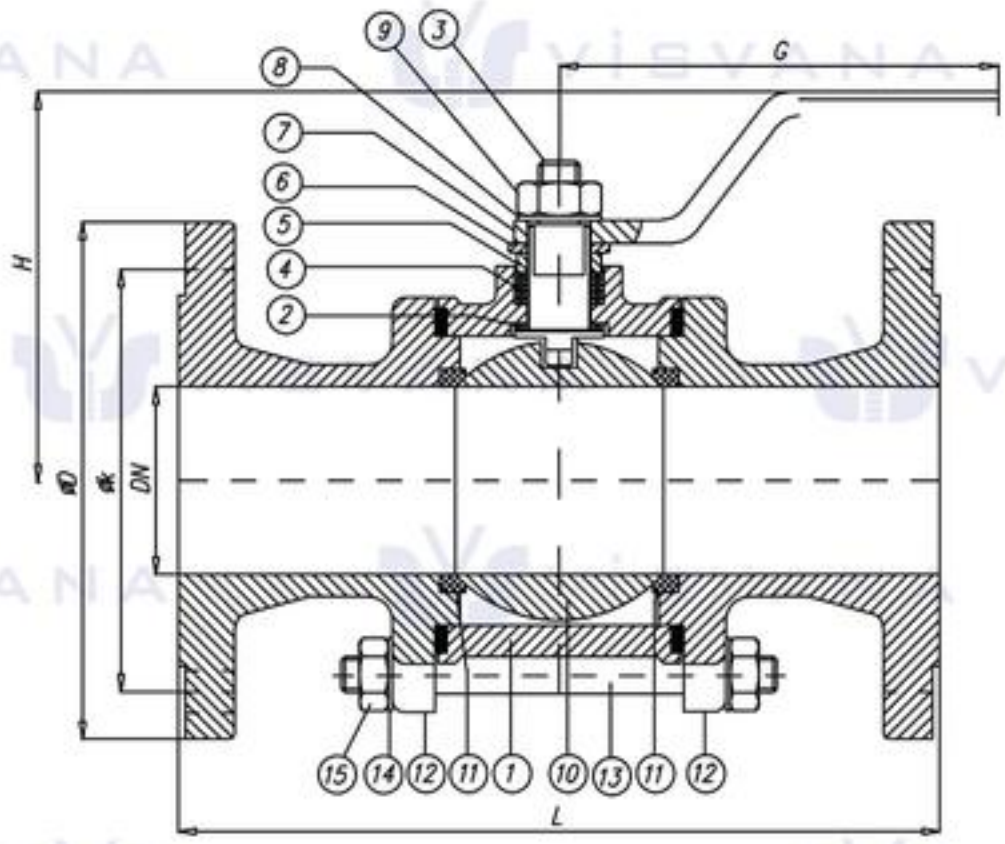

NO	PART NAME	PARÇA ADI	MATERIAL / MALZEME	NO	PART NAME	PARÇA ADI	MATERIAL / MALZEME
1	*Body*	Gövde	AISI 304 / AISI 316	9	*Nut*	Somun	5 D/SS
2	*Gasket*	Alt Teflonu	PTFE	10	*Ball*	Küre	AISI 304 / AISI 316
3	*Stem*	Mil	AISI 304 / AISI 316	11	*Seat*	Küre Yatağı	PTFE
4	*Gasket*	Teflon Ring	PTFE	12	*Flange*	Yan Flanş	AISI 304 / AISI 316
5	*Gland Bush*	Baskı Burcu	AISI 304 / AISI 316	13	*Stud*	Saplama	St / SS
6	*Stopper*	Hareket Pulu	AISI 304 / AISI 316	14	*Washer*	Rondela	St / SS
7	*Lever*	Kol	AISI 304 / AISI 316	15	*Nut*	Somun	5 D/SS
8	*Washer*	Rondela	AISI 304 / AISI 316				

Nominal Diameter / Anma Çapı	DN	15	20	25	32	40	50	65	80	100	125	150
Valve Dimensions / Vana Boyutları DIN EN 558-1-1/15 DIN 3357-2 TS 3148/17	L	130	150	160	180	200	230	290	310	350	400	480
	G max.	160	180	180	250	300	320	350	450	500	700	700
	H max.	95	110	115	130	135	145	155	195	220	265	300
Flange Dimensions / Flanş Ölçüleri DIN EN 1092-1-2 PN 10-16	D	95	105	115	140	150	165	185	200	220	250	285
	k	65	75	85	100	110	125	145	160	180	210	240
Flange Dimensions / Flanş Ölçüleri DIN EN 1092-1-2 PN 25	D	95	105	115	140	150	165	185	200	235	270	300
	k	65	75	85	100	110	125	145	160	190	220	250
Flange Dimensions / Flanş Ölçüleri DIN EN 1092-1-2 PN 40	D	95	105	115	140	150	165	185	200	235	270	300
	k	65	75	85	100	110	125	145	160	190	220	250
Weight / Ağırlık (~ for SS)	kg	2,3	3,8	4	6,5	8,55	13,55	20,15	29,5	40,3	68	86

BALL VALVE, FULL BORE
TAM GEÇİŞLİ KÜRESEL VANA

VKVP-16

Design / Dizayn : DIN 3357
Pressure Rate / Basınç Aralığı : PN 16
Size Range / Ölçü Aralığı: DN32 - DN200
Face to Face / L Boyu : EN 558 Serie 14, DIN 3202 F4
Flange Ends / Flanş : EN 1092
Tests / Testler : EN 12266 & API 598

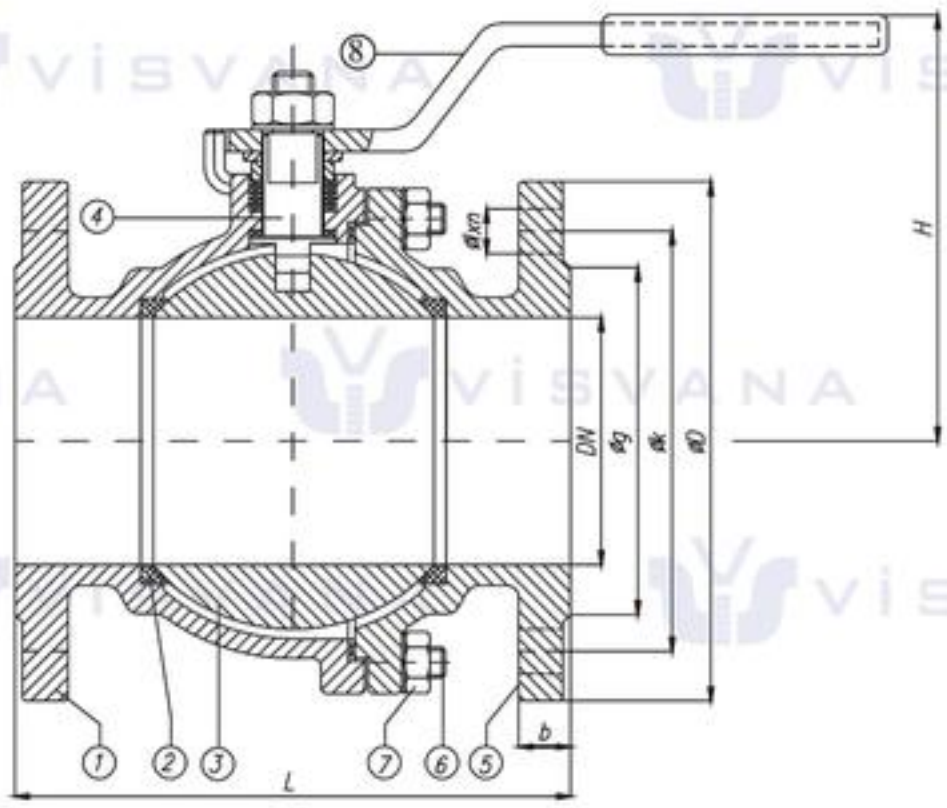

NO	PART NAME	PARÇA ADI	MATERIAL / MALZEME
1	*Body*	Gövde	Paslanmaz Döküm AISI 316 Cast Stainless Steel AISI 316
2	*Body Seat*	Gövde Burcu	Teflon / PTFE
3	*Ball*	Küre	Paslanmaz Döküm AISI 316 - Cast Stainless Steel AISI 316
4	*Stem*	Mil	Paslanmaz Çelik - Stainless Steel ASTM A182 Gr. F316
5	*Bonnet*	Kapak	Paslanmaz Döküm AISI 316 - Cast Stainless Steel AISI 316
6	*Stud*	Saplama	Paslanmaz Çelik - Stainless Steel ASTM A182 Gr. F316
7	*Nut*	Somun	Paslanmaz Çelik - Stainless Steel ASTM A182 Gr. F316
8	*Lever*	Kol	Sfero Döküm veya Çelik - Ductile Iron and Steel

Valve Dimensions / Boyut Ölçüleri DIN 3357			PN 16 *Flange Dimensions* / Flanş Ölçüleri DIN EN 1092					*Weight* / Ağırlık
DN	L	H	ØD	Øk	Øg	b	ØLxn	Kg.
32	130	110	140	100	78	18	Ø18x4	8
40	140	160	150	110	88	18		11
50	150	160	165	125	102	18		16
65	170	170	185	145	122	18		25
80	180	210	200	160	138	20	Ø18x8	35
100	190	240	220	180	158	20		50
125	200	280	250	210	188	22		74
150	210	330	285	240	212	22	Ø22x8	110
200	230	400	340	295	268	24	Ø37x12	155

VSSKV-63

STAINLESS STEEL BALL VALVE
PASLANMAZ ÇELİK KÜRESEL VANA

Pressure Rate / Basınç Aralığı: PN 63
Size Range / Ölçü Aralığı: 1/2”-4”
Temperature / Sıcaklık: -10....+180 °C
Flange Ends / Flanş: BSP Dişli - Threaded
Test: DIN EN 12266

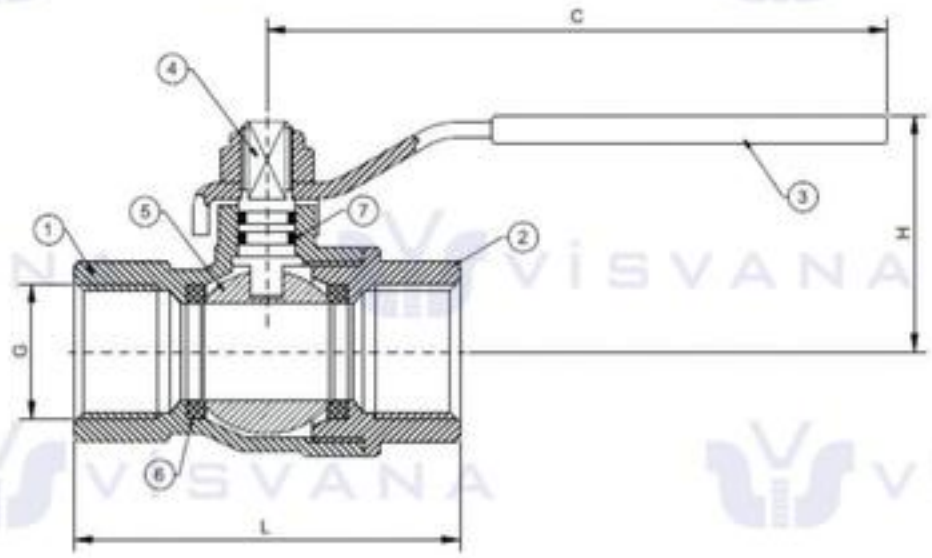

PRESSURE - TEMPERATURE	
°C	-10 150
PN	63

NO	PART NAME	PARÇA ADI	MATERIAL / MALZEME
1	*Body*	Gövde	Stainless Steel 304 / 316
2	*Bonnet*	Kapak	Stainless Steel 304 / 316
3	*Lever*	Kol	Stainless Steel + Vinly Plated
4	*Stem*	Mil	Stainless Steel 304 / 316
5	*Ball*	Küre	Stainless Steel 304 / 316
6	*Seat*	Küre yatağı	PTFE
7	*O-Ring*	O-Ring	PTFE

Nominal Pressure / Anma Basıncı *Nominal Diameter* / Anma Çapı	PN 63						
	DN	15	20	25	32	40	50
Valve Dimensions / Vana Boyutları	G	1/2″	3/4″	1″	1″-1/4″	1″-1/2″	2″
	L	75	80	90	110	120	140
	A	103	123	123	153	153	185
	H	52	61	65	79	83	97
Weight / Ağırlık	kg	0,2	0,5	0,8	1,1	1,8	3

Float Valves, Pressure Reducing Valves

Şamandıralı Vanalar, Basınç Düşürücüler

Products & Technical Data

Teknik Bilgiler

www.visvana.com

VASV-10-16

ANGLE FLOAT VALVE
KÖŞE ŞAMANDIRALI VANA

Design / Dizayn : DIN 3356
Face to Face / L Boyu : EN 558 Serie 8, DIN 3202 F32
Pressure / Basınç : PN 10 -16
Size Range / Ölçü Aralığı : DN40 - DN600
Flange Ends / Flanş : EN 1092-2/B
Tests / Testler : EN 12266

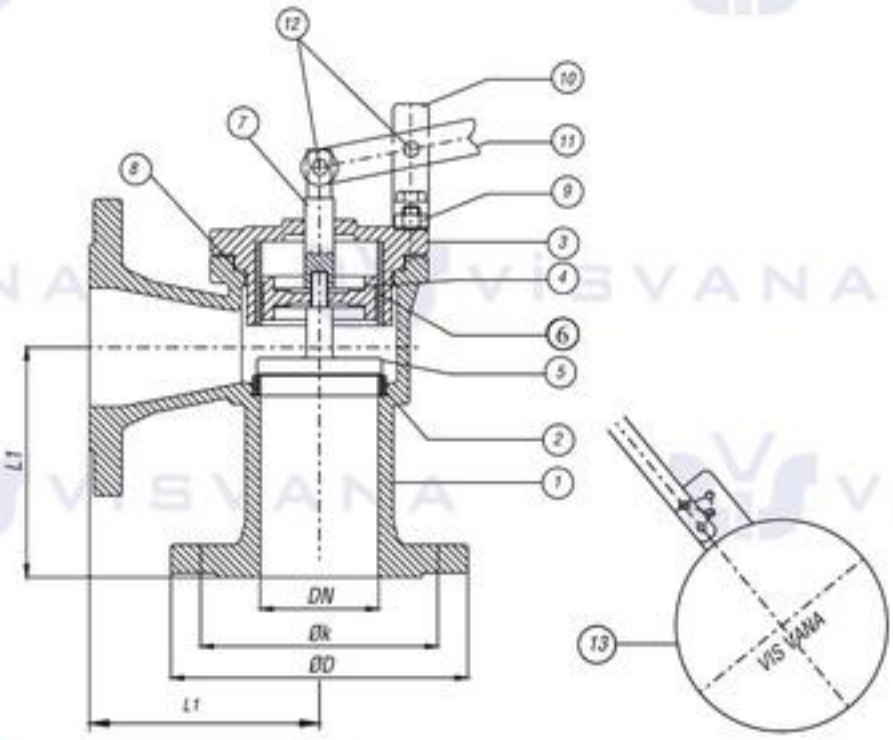

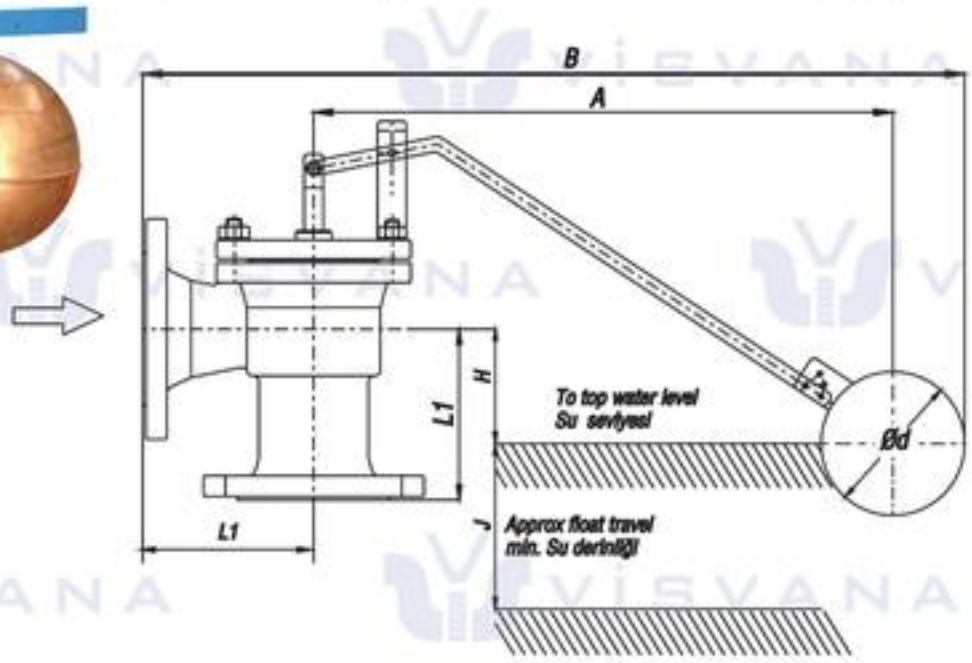

NO	PART NAME	PARÇA ADI	MATERIAL / MALZEME	NO	PART NAME	PARÇA ADI	MATERIAL / MALZEME
1	*Body*	Gövde	GG 25 / GGG-40	8	*Seal*	Conta	EPDM
2	*Seat Ring*	Burç	Ms 58 / 1,4021	9	*Bolt*	Civata	8,8
3	*Bonnet*	Kapak	GG 25 / GGG-40	10	*Fulcrum*	Destek	GG 25 / GGG-40
4	*Seat*	Burç	Ms 58 / 1,4021	11	*Lever*	Kol	St 37
5	*Disk*	Klape	Ms 58 / 1,4021	12	*Pin*	Pim	1,4021
6	*Cup Washer*	Keçe	St 37 / NBR	13	*Float*	Küre	Bronze / St 37 / SS420 / SS 304
7	*Spindle*	Mil	1,4021				

Nominal Pressure / Anma Basıncı *Nominal Diameter* / Anma Çapı	PN 10 / 16										
	DN	40	50	65	80	100	125	150	200	250	300
Valve Dimensions / Vana Boyutları DIN 3356 DIN 3202-F32	L1	115	125	145	155	175	200	225	275	325	375
	A	1295		1460		1535	1850		2145	2545	3035
	B	1555		1740		1855	2260		2675	3070	3620
	H	172		305		330	340			455	
	J	450		546			700		920	1230	1580
	Ød	280		320		350		400		500	
Flange Dimensions / Flanş Ölçüleri DIN 2501 / DIN EN 1092-2 PN10	D	150	165	185	200	220	250	285	340	395	445
	k	110	125	145	160	180	210	240	295	350	400
Flange Dimensions / Flanş Ölçüleri DIN 2501 / DIN EN 1092-2 PN16	D	150	165	185	200	220	250	285	340	405	460
	k	110	125	145	160	180	210	240	295	355	410
Weight / Ağırlık (~ for iron)	kg	19	20	30	35	55	70	100	180	270	370

FLOAT VALVE
ŞAMANDIRALI VANA

VDSV-10-16

Design / Dizayn : DIN 3356
Face to Face / L Boyu : EN 558 Serie 1, DIN 3202 F1
Pressure / Basınç : PN 10 -16
Size Range / Ölçü Aralığı : DN40 - DN600
Flange Ends / Flanş : EN 1092-2/B
Tests / Testler : EN 12266

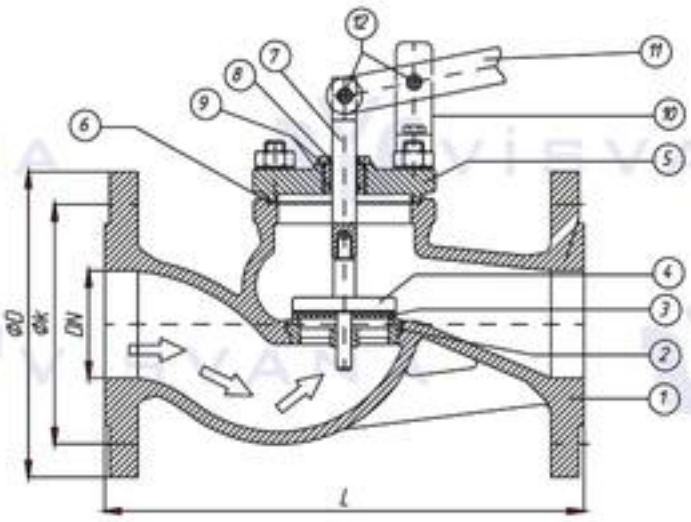

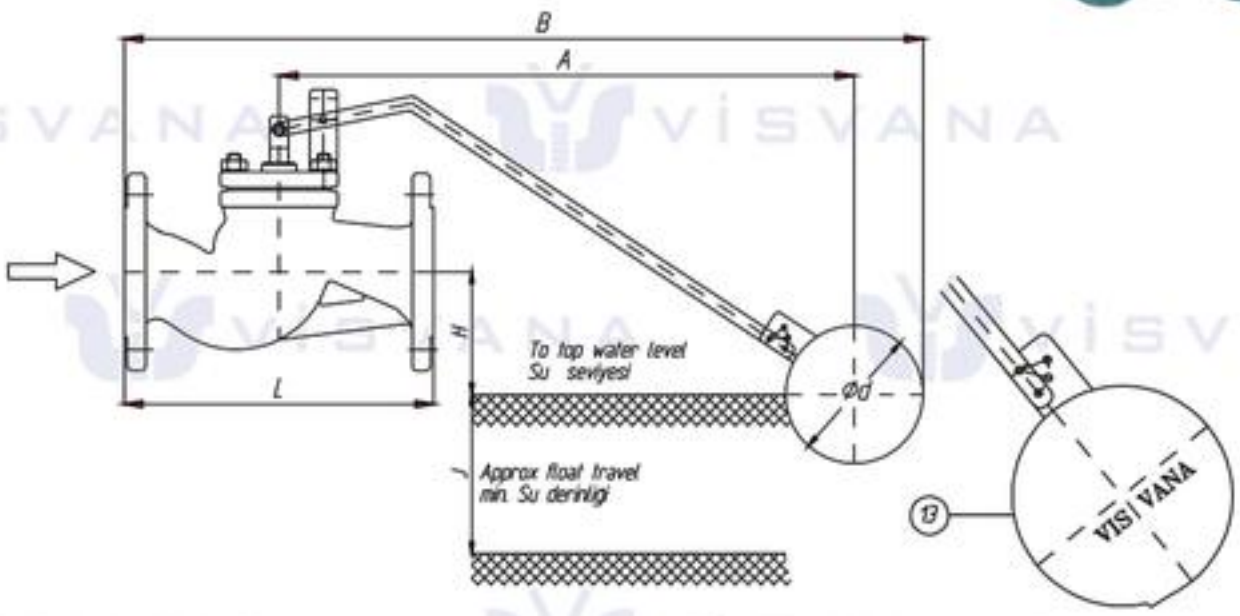

NO	PART NAME	PARÇA ADI	MATERIAL/MALZEME	NO	PART NAME	PARÇA ADI	MATERIAL/MALZEME
1	*Body*	Gövde	GG 25 / GGG-40	8	*Packing Nut*	Mil Somunu	Ms 58 / 1,4021
2	*Seat Ring*	Burç	Ms 58 / 1,4021	9	*O-Ring*	O-Ring	EPDM
3	*Seal*	Conta	EPDM	10	*Fulcrum*	Destek	St 37
4	*Disk*	Klape	Ms 58 / 1,4021	11	*Lever*	Kol	St 37
5	*Bonnet*	Kapak	GG 25 / GGG-40	12	*Pin*	Pim	1,4021
6	*Gasket*	Conta	EPDM	13	*Float*	Küre	Copper/AISI 304-316
7	*Stem*	Mil	1,4021				

Nominal Pressure / Anma Basıncı *Nominal Diameter* / Anma Çapı	PN 10 / 16										
	DN	40	50	65	80	100	125	150	200	250	300
Valve Dimensions / Vana Boyutları DIN 3202/2-F1 DIN EN 558-1-1	L	200	230	290	310	350	400	480	600	730	850
	A	1295	1295	1460	1460	1535	1850	1850	2145	2345	2995
	B	1562	1562	1755	1755	1890	2305	2305	2995	3150	3700
	H	172	172	305	305	330	340	340	340	455	455
	J	463	463	545	545	546	721	721	907	1150	1502
	Ød	280		320		350		400		500	
Flange Dimensions / Flanş Ölçüleri DIN EN 1092 PN10	D	150	165	185	200	220	250	285	340	400	455
	k	110	125	145	160	180	210	240	295	350	400
	Øxn	Ø18x4			Ø18x8			Ø22x8		Ø22x12	
Flange Dimensions / Flanş Ölçüleri DIN EN 1092 PN16	D	150	165	185	200	220	250	285	340	400	455
	k	110	125	145	160	180	210	240	295	355	410
	Øxn	Ø18x4			Ø18x8			Ø22x8	Ø22x12	Ø22x16	
Weight / Ağırlık (~ for iron)	kg	19	20	30	35	55	70	100	180	270	370

VPRV-10-16-25

PRESSURE REDUCING VALVE
BASINÇ KIRICI VANA

NO	PART NAME	PARÇA ADI	MATERIAL / MALZEME	NO	PART NAME	PARÇA ADI	MATERIAL / MALZEME
1	Body	Gövde	En Gjs 400	8	Pilot valve	Pilot Vana	MS 58 Dövme
2	Bottem Plate	Akt. Alt Hazne	En Gjs 400	9	Manometer	Manometre	Ø63
3	Disc	Klape	SAE 1040 + EPDM Conta	10	Seat Surface	Bası Yüzeyi	EPOXY Kaplama
4	Actuator Bonnet	Aktuatör Kapak	En Gjs 400	11	Gland	Mil Merkezleme Burcu	CuSn10
5	Bolt	Altı Köşe Başlı Civata	8x8 Galveniz Kaplı	12	Plane Washer	Klape Rondelası	SAE 1040
6	Needle Valve	İğne Vana	MS 58 Dövme	13	Diaphragm wrecking bar	Diyafram Manivelası	SAE 1040
7	Diaphragm	Diyafram	Neopren Karabezli Kauçuk	14	Sten	wwMil	AISI 304

Size		A, B		C		L		H		Weight		Size		A, B		C		L		H		Weight	
mm	inch	mm	inch	mm	inch	mm	inch	mm	inch	kg	lbs	mm	inch	mm	inch	mm	inch	mm	inch	mm	inch	kg	lbs
40	1 1/2"	210	8	180	7	205	8.1	260	10.2	11.8	26	250	10"	380	15	580	23	637	25.1	783	30.8	307	675
50	2"	210	8	180	7	210	8.3	265	10.4	15	33	300	12"	405	16	685	27	762	30	961	37.8	505	1111
65	2 1/2"	210	8	180	7	222	8.7	278	10.9	18.4	40	250	14"	405	16	685	27	767	30.2	996	39.2	549	1208
80	3"	230	9	230	9	264	10.4	332	13.1	32	70	400	16"	505	20	965	38	1024	40.3	1179	46.4	1070	2354
100	4"	255	10	275	11	335	13.2	422	16.6	56	123	450	18"	505	20	965	38	1030	40.5	1208	47.6	1095	2409
150	6"	290	11	385	15	433	17	542	21.3	106	233	500	20"	505	20	965	38	1136	44.7	1241	48.9	1129	2484
200	8"	335	13	460	18	524	20.6	666	26.2	190	418												

Safety Valves, Steam Traps, Needle Valves, Tank Valves, Plug Valves

Emniyet Ventilleri, Kondenstoplar, İğne Vanalar, Kazan Blöf Vanaları, Blöf (Plug) Vanalar

Products & Technical Data

Teknik Bilgiler

www.visvana.com

VEYT-10-16-25-40
VEYO-10-16-25-40

SAFETY VALVES (Spring Loaded)
Full Lift VEYT-10-16-25-40
Proportional Lift VEYO-10-16-25-40

EMNİYET VENTİLİ (Yaylı)
Tam Kalkışlı VEYT-10-16-25-40
Oransal Kalkışlı VEYO-10-16-25-40

Nominal Pressure / Anma Basıncı: PN10-16-25-40
Nominal Diameter / Anma Çapı: DN25-DN100
Temperature / Sıcaklık: +80 °C
Flange Ends / Flanş: DIN 2533
Dimensions / Boyutlar: DIN 3202-F32 (Açık)

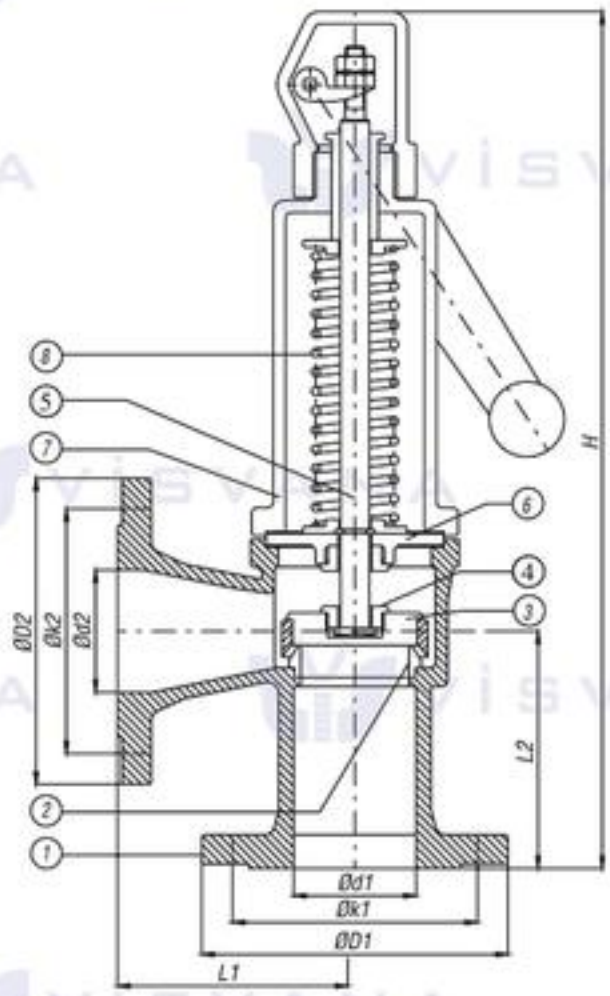

NO	P. NAME	P. ADI	MATERIAL / MALZEME
1	Body	Gövde	GG 25 / GGG-40 / GS-C 25
2	Seat Ring	Burc	AISI 304
3	Disc	Klape	AISI 304
4	Disc Nut	Baskı	Ms 58
5	Spindle	Mil	1,4021
6	Plate	Klavuz	GG 25 / GGG-40
7	Bonnet	Kapak	GG 25 / GGG-40 / GS-C 25
8	Spring	Yay	1,4310

SPRING, FULL LIFT YAYLI TAM KALKIŞLI				Ends / Bağlantılar													
				DIN 2532 / DIN 2533 PN 10-16							DIN 2544 / DIN 2545 PN 25-40						
	Dimensions / Boyutlar			Inlet / Giriş			Outlet / Çıkış			Weight Ağırlık	Inlet / Giriş			Outlet / Çıkış			Weight Ağırlık
DN	L1	L2	H	Ød1	ØD1	Øk1	Ød2	ØD2	Øk2	Kg	Ød1	ØD1	Øk1	Ød2	ØD2	Øk2	Kg
25	100	115	410	25	115	85	40	150	110	10	25	115	85	40	150	110	11
32	110	125	426	32	140	100	50	165	125	13	32	140	100	50	165	125	15
40	120	135	446	40	150	110	65	185	145	16	40	150	110	65	185	145	18
50	135	150	484	50	165	125	80	200	160	21	50	165	125	80	200	160	24
65	140	155	549	65	185	145	100	220	180	30	65	185	145	100	235	190	34
80	150	175	631	80	200	160	125	250	210	40	80	200	160	125	270	220	45
100	170	195	686	100	220	180	150	285	240	57	100	235	190	150	300	250	64

SPRING, PROPORTIONAL LIFT YAYLI ORANSAL KALKIŞLI				Ends / Bağlantılar													
				DIN 2532 / DIN 2533 PN 10-16							DIN 2544 / DIN 2545 PN 25-40						
	Dimensions / Boyutlar			Inlet / Giriş			Outlet / Çıkış			Weight Ağırlık	Inlet / Giriş			Outlet / Çıkış			Weight Ağırlık
DN	L1	L2	H	Ød1	ØD1	Øk1	Ød2	ØD2	Øk2	Kg	Ød1	ØD1	Øk1	Ød2	ØD2	Øk2	Kg
25	100	100	383	25	115	85	25	115	85	8	25	115	85	25	115	85	10
32	105	105	402	32	140	100	32	140	100	12	32	140	100	32	140	100	13
40	115	115	413	40	150	110	40	150	110	15	40	150	110	40	150	110	16
50	125	125	430	50	165	125	50	165	125	18	50	165	125	50	165	125	21
65	145	145	519	65	185	145	65	185	145	27	65	185	145	65	185	145	30
80	155	155	584	80	200	160	80	200	160	35	80	200	160	80	200	160	40
100	175	175	636	100	220	180	100	220	180	46	100	235	190	100	235	190	57

SPRING LOAD NOZZLE TYPE PRESSURE RELIEF SAFETY VALVE

YAYLI TAM KALKIŞLI NOZULLU TİP EMNİYET VENTİLİ

VEVY-40-63-100-C150-C300-C600

Pressure Rate / Basınç Aralığı: PN40-63-100 Class 150, Class 300, Class 600, Class 900, Class 1500, Class 2500

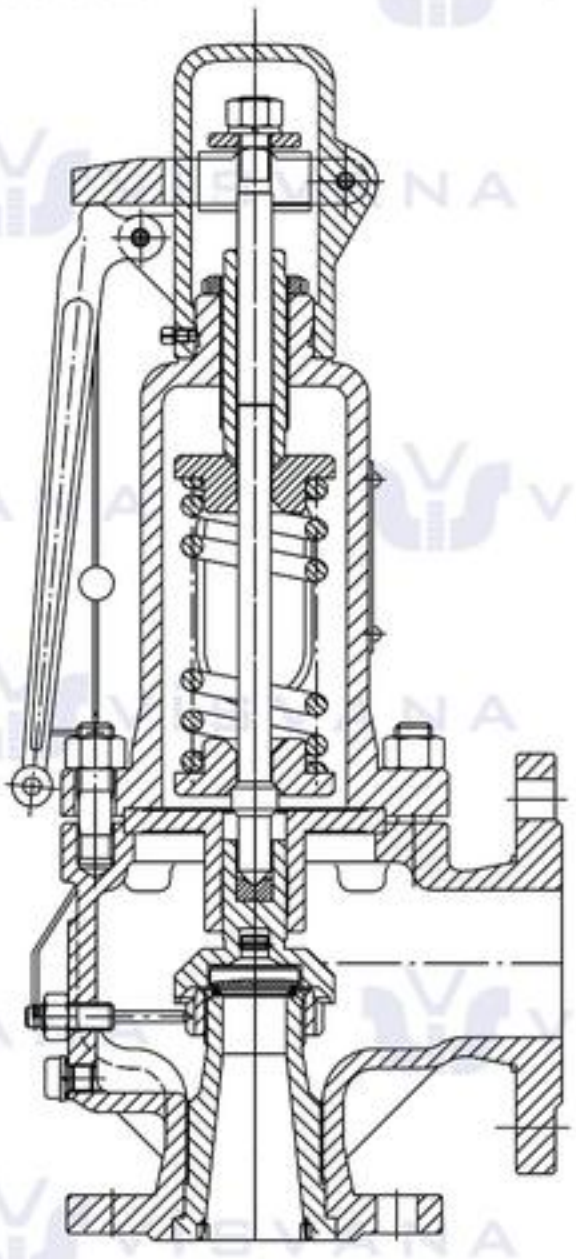

NO	PART NAME	PARÇA ADI	MATERIAL / MALZEME	NO	PART NAME	PARÇA ADI	MATERIAL / MALZEME
1	*Body*	Gövde	WCB / WC6 / WC7 / CF8 / CF8M	4	*Guide*	Kılavuz	304 / 316 / 316Ti
2	*Seat*	Burc	304 / 316 / 316Ti / Stellite	5	*Stem*	Mil	2Cr13 / 304 / 316 / 316Ti
3	*Disc*	Klape	304 / 316 / 316Ti / Stellite	6	*Spring*	Yay	50CrVA

Nominal Diameter / Anma Çapı	DN
Valve Dimensions / Vana Boyutları	LÜTFEN İLETİŞİME GEÇİNİZ *PLEASE ASK*

VTAUÇ-16

INVERT BUCKET STEAM TRAP (Bottom Inlet-Top Outlet)

TERS KOVALI KONDENSTOP (Alttan Giriş, Üstten Çıkış)

Pressure Rate / Basınç Aralığı: PN16
Dimensions / Boyutlar: ISO 228/1
Threaded - Dişli
Size Range / Ölçü Aralığı: DN 15-50
Thread Size / Diş Ölçüleri: R1/2" - R2"

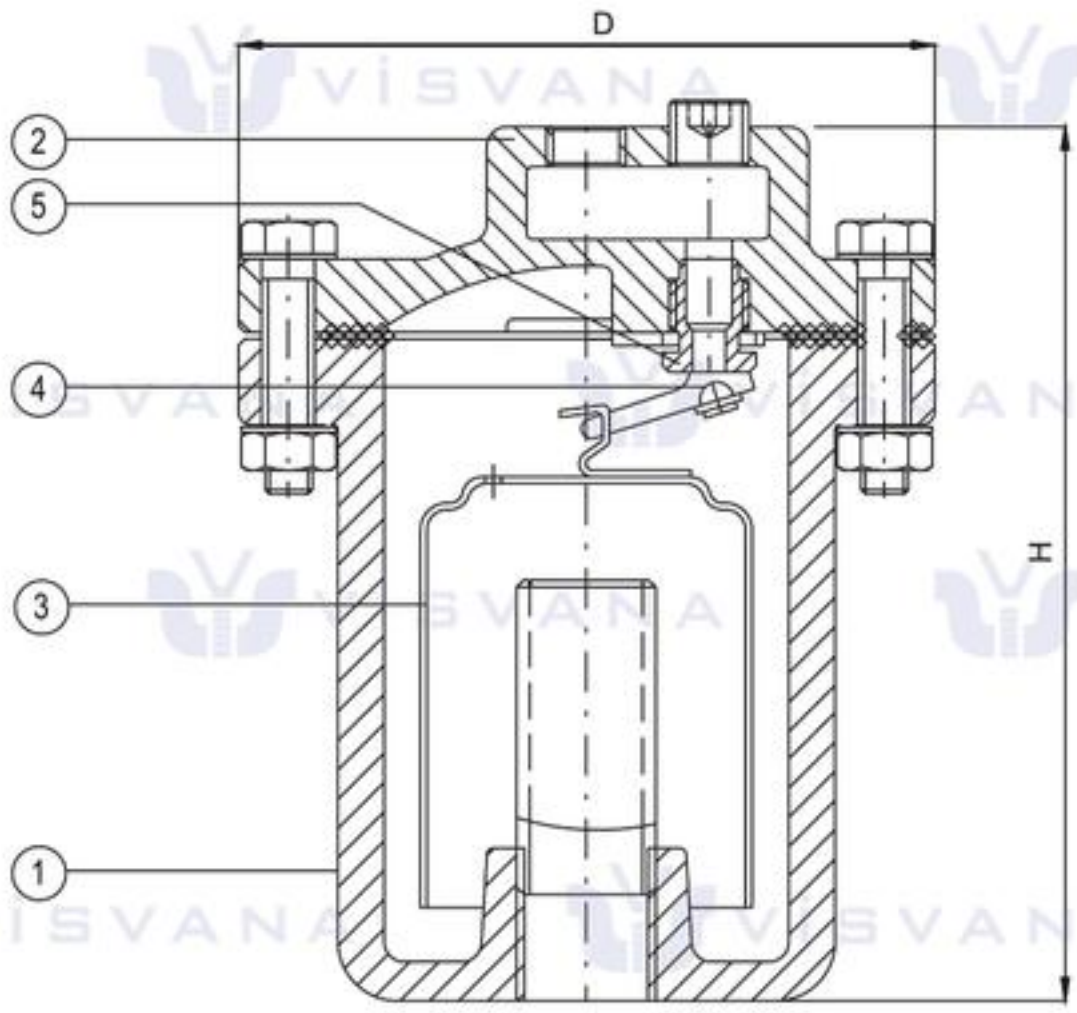

NO	PART NAME	PARÇA ADI	MATERIAL / MALZEME
1	*Body*	Gövde	GG 25 / GGG-40
2	*Bonnet*	Kapak	GG 25 / GGG-40
3	*Bucket*	Kova	1,4301
4	*Valve*	Küre Klape	1,4021
5	*Orifice*	Orifis	1,4021

Nominal Pressure / Anma Basıncı	PN 16						
Nominal Diameter / Anma Çapı	DN	15	20	25	32	40	50
Valve Dimensions / Vana Boyutları	G	108	136	184	188	216	280
	L	160	200	270	310	360	425
Threaded Dimensions / Diş Boyutları ISO 228/1	A H	R1/2"	R3/4"	R1"	R1 1/4"	R1 1/2"	R2"
Weight / Ağırlık	kg	2,8	6	13	16	24	45

INVERT BUCKET STEAM TRAP (Threaded)

TERS KOVALI KONDENSTOP (Dişli)

VTKD-16

Pressure Rate / Basınç Aralığı: PN16
Dimensions / Boyutlar: ISO 228/1
Threaded - Dişli
Range Size / Ölçü Aralığı: DN 15 - 32

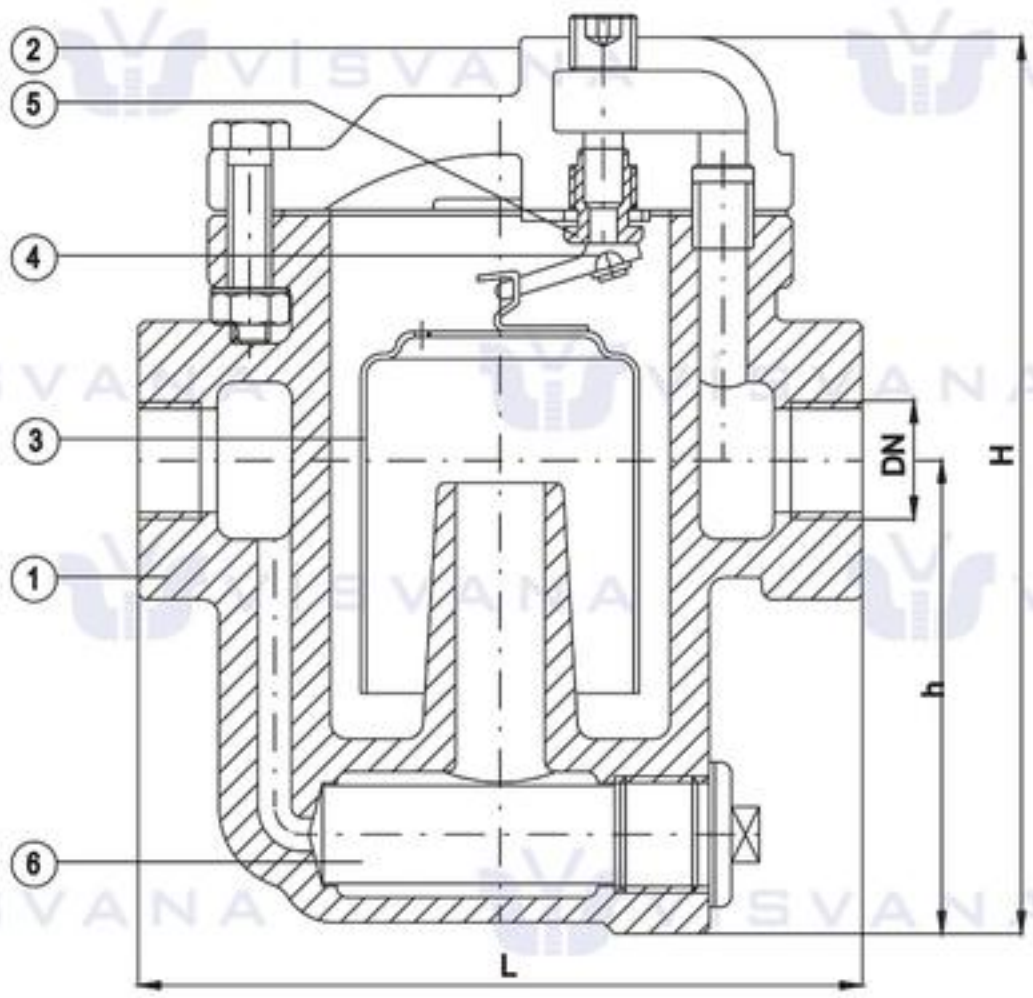

NO	PART NAME	PARÇA ADI	MATERIAL / MALZEME
1	*Body*	Gövde	GG 25 / GGG-40
2	*Bonnet*	Kapak	GG 25 / GGG-40
3	*Bucket*	Kova	1,4301
4	*Valve*	Küre Klape	1,4021
5	*Orifice*	Orifis	1,4021
6	*Filter*	Filtre	1,4301

Nominal Pressure / Anma Basıncı	PN 16				
Nominal Diameter / Anma Çapı	DN	15	20	25	32
Valve Dimensions / Vana Boyutları	L	125	170	207	230
	h	81	146	187	
	H	150	238	320	
Threaded Dimensions / Diş Boyutları ISO 228/1	DN	1/2"	3/4"	1"	1 1/4"
Weight / Ağırlık	kg	3,1	8,5	16	20

VKRF-16

INVERT BUCKET STEAM TRAP (Flanged)

TERS KOVALI KONDENSTOP (Flanşlı)

Pressure Rate / Basınç Aralığı: PN16
Dimensions / Boyutlar: DIN 2501 Flange
Size Range / Ölçü Aralığı: DN 15 - 50

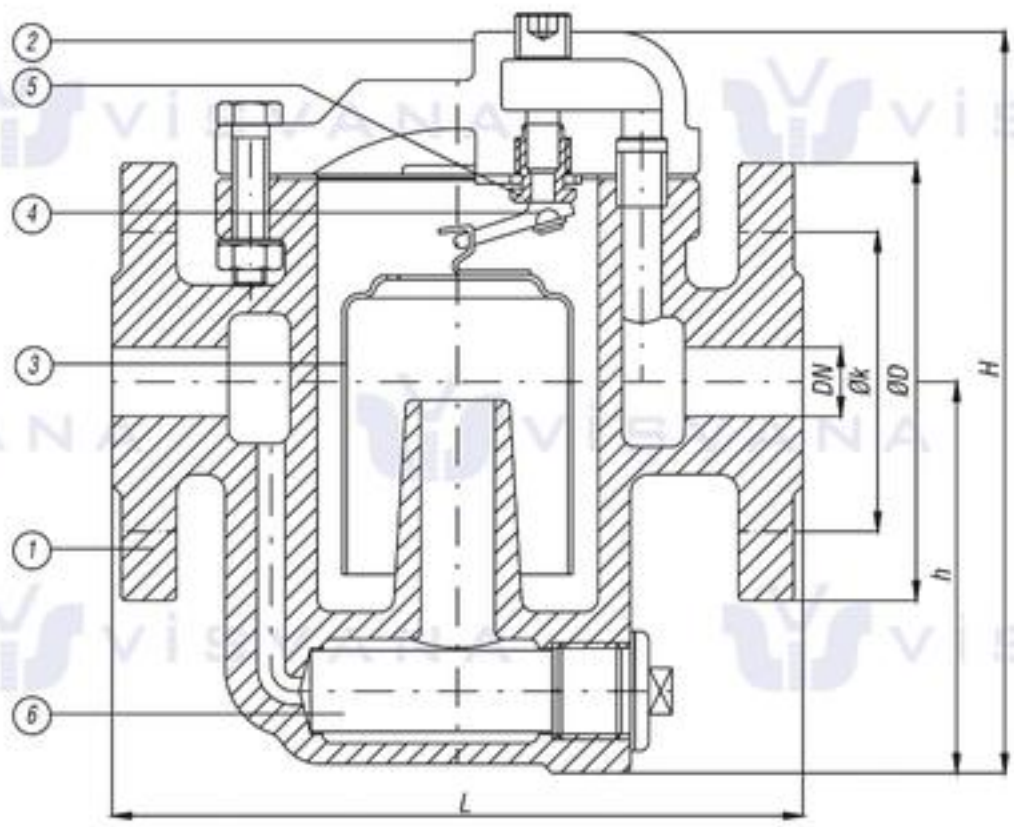

NO	*PART NAME*	PARÇA ADI	*MATERIAL* / MALZEME
1	*Body*	Gövde	GG 25 / GGG-40
2	*Cover*	Kapak	GG 25 / GGG-40
3	*Bucket*	Kova	1,4301
4	*Valve*	Küre Klape	1,4021
5	*Orifice*	Orifis	1,4021
6	*Filter*	Filtre	1,4301

Nominal Pressure / Anma Basıncı	PN 16						
Nominal Diameter / Anma Çapı	DN	15	20	25	32	40	50
Valve Dimensions / Vana Boyutları	L	156	200	240	260	280	300
	h	81	146	187		200	
	H	150	238	320		370	
Flange Dimensions / Flanş Ölçüleri DIN 2501	D	95	105	115	140	150	165
	k	65	75	85	100	110	125
Weight / Ağırlık	Kg	4,2	9	17	21	29	30

TERMODYNAMIC STEAM TRAP
TERMODİNAMİK KONDENSTOP

VTDK-16

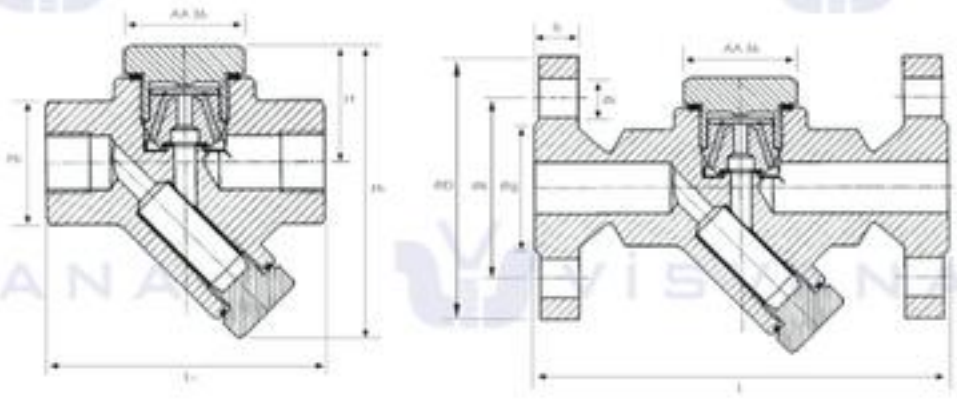

Pressure Rate / Basınç Aralığı: PN16
Dimensions / Boyutlar: ISO 228/1
Threaded - Dişli
Size Range / Ölçü Aralığı: DN 15- 20-25

NO	*PART NAME*	PARÇA ADI	*MATERIAL* / MALZEME
1	*Body*	Gövde	Dövme Çelik / Forged Steel ASTM A1 05
2	*Cover*	Kapak	Paslanmaz Çelik / Forged Steel AISI 304A1 05
3	*Cover Gasket*	Süzgeç	Paslanmaz Çelik / Stainless Steel
4	*Disc*	Disk	Paslanmaz Çelik / Stainless Steel
5	*Seat*	Sit	Paslanmaz Çelik / Stainless Steel

Dimensions / Boyutlar	PN 16							
Size / Çap	L-L1	H-H1-H2	D	b	k	g	i	No. Holes
15	150-95	40-100-42	95	16	65	45	14	4
20	150-95	40-100-42	105	18	75	58	14	4
25	160-95	40-100-42	115	18	85	68	14	4

VSDK-16

Pressure Rate / *Basınç Aralığı*: PN16
Size Range / Ölçü Aralığı: ISO 228/1 Threaded - *Dişli*
Flanged - Flanşlı: DIN 2533
Dimensions / Boyutlar: DN 15- 20-25

FLOAT TYPE STEAM TRAP
ŞAMANDRALI KONDENSTOP

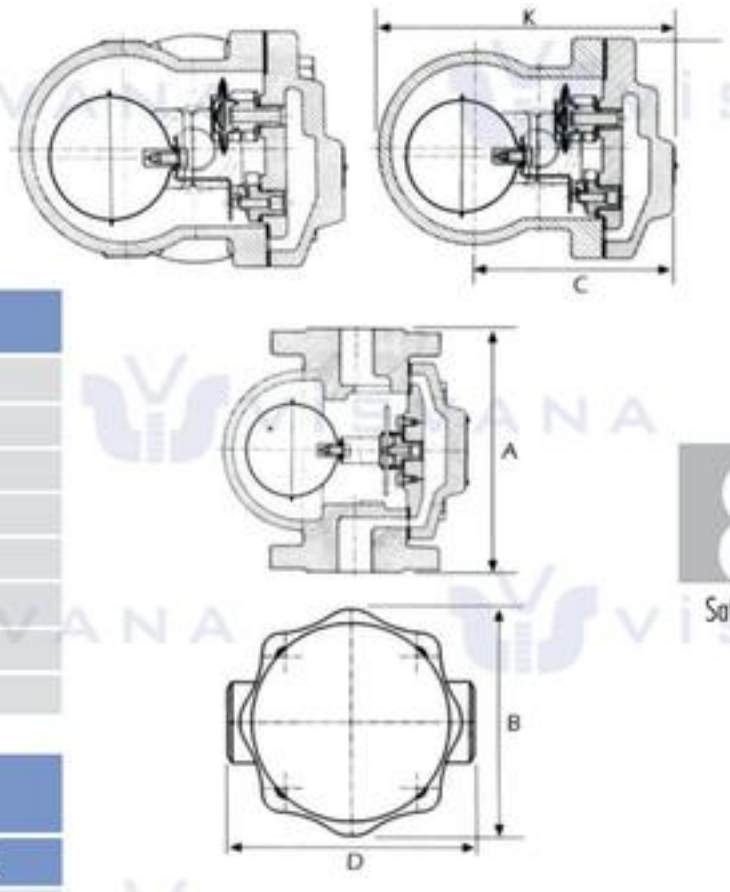

NO	*PART NAME*	PARÇA ADI	*MATERIAL* / MALZEME
1	*Cover*	Kapak	Çelik Döküm / GS - C25
2	*Body*	Gövde	Çelik Döküm / GS - C25
3	*Thermostatic Capsule*	Termostatik Kapsül	Paslanmaz Çelik / Stainless Steel
4	*Air Vent Seat*	Kapsül Siti	Paslanmaz Çelik / Stainless Steel
5	*Float Seat*	Şamandıra Siti	Paslanmaz Çelik / Stainless Steel
6	*Main Valve (Ball)*	Kapama Valfi	Paslanmaz Çelik / Stainless Steel
7	*Float Lever*	Şamandıra Kolu	Paslanmaz Çelik / Stainless Steel
8	*Float*	Şamandıra	Paslanmaz Çelik / Stainless Steel

Dimensions / Boyutlar	PN 16				
Size / Çap	A	K	B	C	D
15	150	150	108	68	122
20	150	150	108	68	122
25	160	167	108	107	145

VİKD-C150 / C1500

THREADED NEEDLE VALVES
DİŞLİ İĞNELİ VANA

Size Range/ Ölçü Aralığı: 1/8".....2"
Pressure / Basınç: PN 0-250
CLASS 150..... CLASS 1500
Temperature / Sıcaklık Min. -60 °C
Max. +500 °C
Dimensions / Boyutlar: Threaded EN 10226-1
NPT Threaded ANSI-B16.11

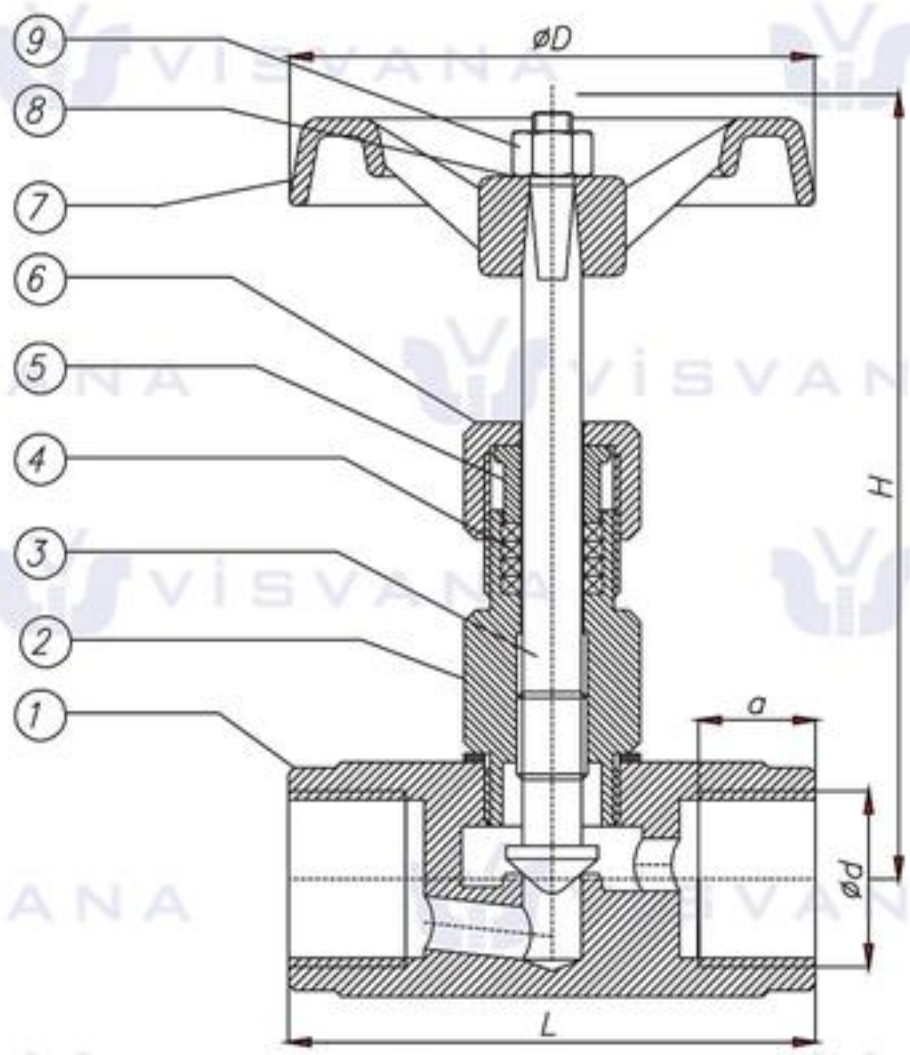

NO	PART NAME	PARÇA ADI	MATERIAL / MALZEME	NO	PART NAME	PARÇA ADI	MATERIAL / MALZEME
1	*Body*	Gövde	Brass / ASTM A 105 / SS	6	*Packing Nut*	Salmastra Kapağı	Brass / SS
2	*Bonnet*	Kapak	Brass / ASTM A 105 / SS	7	*Handwheel*	El Çarkı	Aluminium / CI / SS
3	*Stem/Disc*	Mil/Disk	Brass / AISI 420 / AISI 316	8	*Washer*	Rondela	Brass / SS
4	*Packing*	Salmastra	Graphite	9	*Nut*	Somun	Stainlees Steel
5	*Packing Bush*	Salmastra Baskısı	Brass / SS				

Nominal Diameter / Anma Çapı										
	DN	4	6	10	15	20	25	32	40	50
Valve Dimensions / Vana Boyutları	Ød	1/8"	1/4"	3/8"	1/2"	3/4"	1"	1 1/4"	1 1/2"	2"
	a	11		12	14	17	20	22	25	28
	L	50		55	65	75	90	95	100	112
	H	85		95	112	122	146	173	192	216
	ØD	60			75		90	100	125	
Weight / Ağırlık	Kg	04		0,50	0,100	1,050	2,45	3,20	4,35	7,30

PLUG VALVE (2 way)
BLÖF (TAPA) VANA (2 yollu)

VB2F-10-16

Pressure Rate / Basınç Aralığı: PN10-PN16-PN40, ASA 125, ASA 150
Size Range / Ölçü Aralığı: DN50-DN200

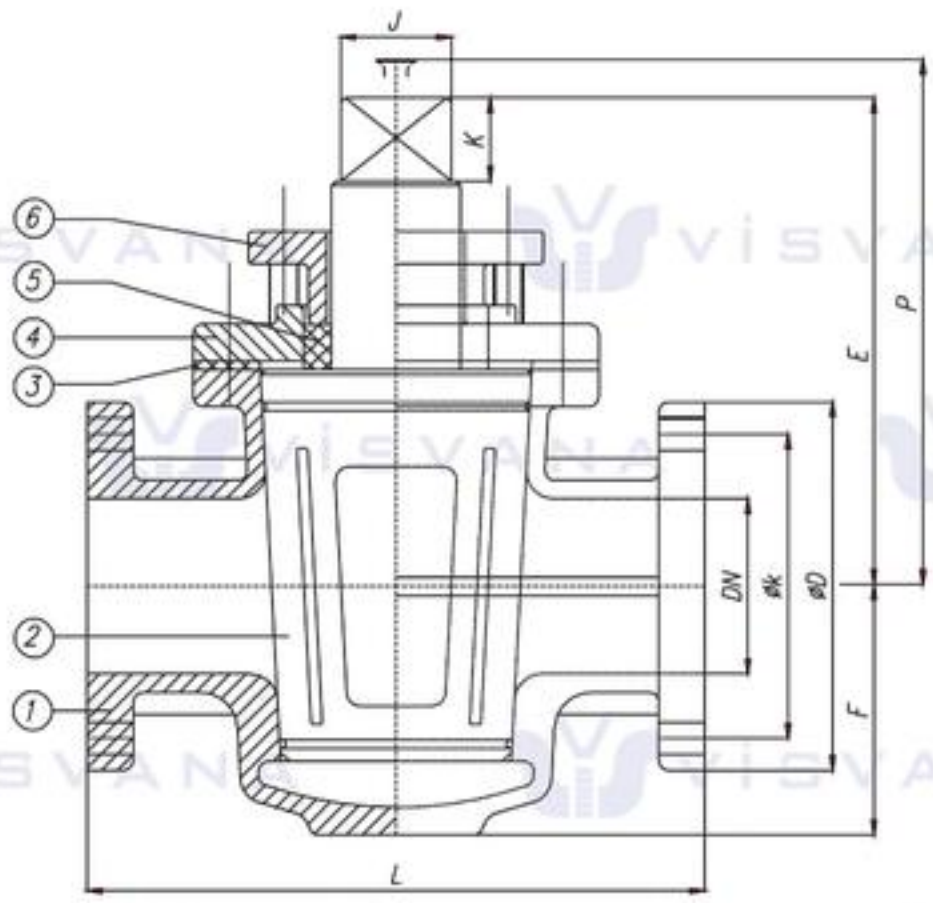

NO	PART NAME	PARÇA ADI	MATERIAL / MALZEME
1	*Body*	Gövde	GG 25 / GGG-40 / GS-C 25
2	*Plug*	Tapa	GG 25 / GGG-40 / GS-C 25
3	*Gasket*	Conta	EPDM /Klingerit
4	*Bonnet*	Kapak	GG 25 / GGG-40 / GS-C 25
5	*Packing*	Salmastra	PTFE
6	*Gland*	Glend	GG 25 / GGG-40 / GS-C 25

Nominal Pressure / Anma Basıncı *Nominal Diameter* / Anma Çapı		PN 10 - 16							
		DN	50	65	80	100	125	150	200
Valve Dimensions / Vana Boyutları BS 1735 DIN EN 558-1/1		L	230	290	310	350	400	480	600
		E	160	173	211	230	265	292	327
		F	70	85	100	114	124	162	192
		P	225	254	292	350	365	422	457
		J	27	32	37	41		54	
		K	27	32	38	46		60	
Flange Dimensions / Flanş Ölçüleri DIN EN 1092-1/2 ASA 125 / ASA 150 BS 4504	PN 10 PN 16	D	165	185	200	220	250	285	340
		k	125	145	160	180	210	240	295
	PN 40	D	165	185	200	235	270	300	375
		k	125	145	160	190	220	250	320
	ASA 125 ASA 150	D	152,4	178	191	229	254	279,5	343
		k	120,7	139,7	152,4	190,5	216	241,3	298,5
Weight / Ağırlık (~ for iron)		kg	15	20	28	32	60	87	105

VB3F-10/16

PLUG VALVES (3-Way)
BLÖF (TAPA) VANA (3 Yollu)

Pressure Rate / Basınç Aralığı: PN 10-16 - 40
ASA125-ASA150
Size Range / Ölçü Aralığı: DN 25 - 100
Temperature / Sıcaklık: -25 + 400 °C
Flange Ends / Flanş: DIN EN 1092
BS 4504/ASA 125/ASA 150

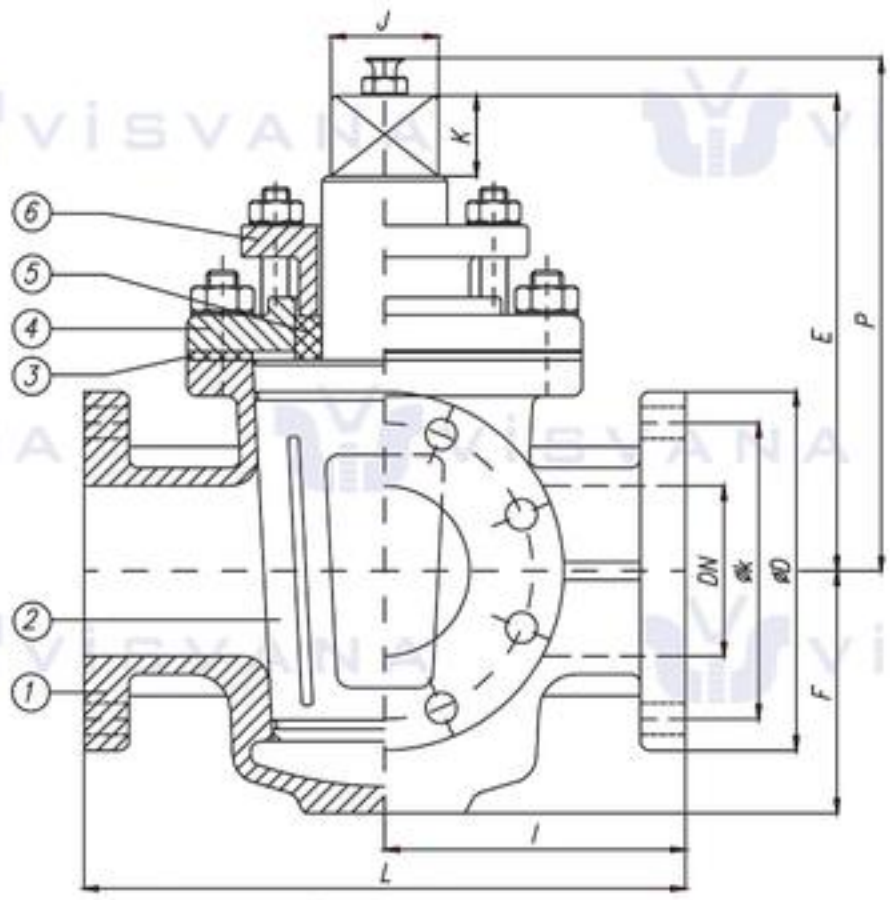

NO	PART NAME	PARÇA ADI	MATERIAL / MALZEME
1	*Body*	Gövde	GG 25 / GGG 40 / GSC 25 / SS 304 / SS 316 / Bronze Rg-5
2	*Plug*	Tapa	GG 25 / GGG 40 / GSC 25 / SS 304 / SS 316 / Bronze Rg-5
3	*Gasket*	Conta	EPDM /Klingerit
4	*Bonnet*	Kapak	GG 25 / GGG 40 / GSC 25 / SS 304 / SS 316 / Bronze Rg-5
5	*Packing*	Salmastra	PTFE + Grophite
6	*Gland*	Glend	GG 25 / GGG 40 / GSC 25 / SS 304 / SS 316 / Bronze Rg-5

Nominal Pressure / Anma Basıncı *Nominal Diameter* / Anma Çapı		PN 10 - 16							
		DN	25	32	40	50	65	80	100
Valve Dimensions / Vana Boyutları BS 1735		L	160	180	200	230	290	310	350
		E	149	165	189	211	246	260	304
		F	57	65	76	95	114	143	175
		P	214	230	270	292	340	360	405
		J	27		32	38	41	48	51
		K	27		32	38		51	
Flange Dimensions / Flanş Ölçüleri DIN EN 1092 ASA 125 / ASA 150 BS 4504	PN 10 PN 16	D	115	140	150	165	185	200	220
		k	85	100	110	125	145	160	180
	PN 40	D	115	140	150	165	185	200	235
		k	85	100	110	125	145	160	190
	ASA 125 ASA 150	D	108	117	127	152,4	178	191	229
		k	79	89	98,5	120,7	139,7	152,4	190,5
Weight / Ağırlık (~ for iron)		kg	5,5	8,5	10	17	23	30	55

Fire Hydrants, Irrigation Hydrants

Yangın Hidrantları, Sulama Hidrantları

Products & Technical Data

Teknik Bilgiler

www.visvana.com

VYÜYH-10-16

OVER GROUND FIRE HYDRANT
YER ÜSTÜ YANGIN HİDRANTI

Pressure Rate / Basınç Aralığı: PN10/16
Size Range / Ölçü Aralığı: DN80-DN100
Flange Ends / Flanş: DIN 3222 / TS 2821-1a

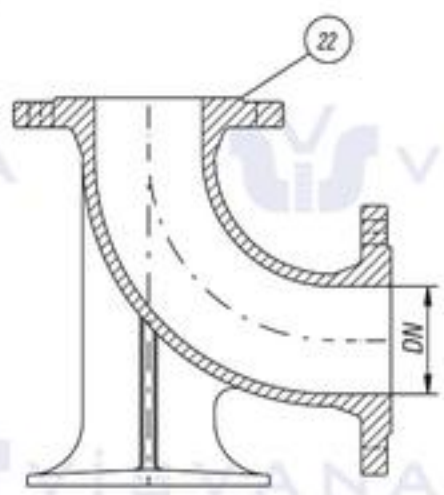

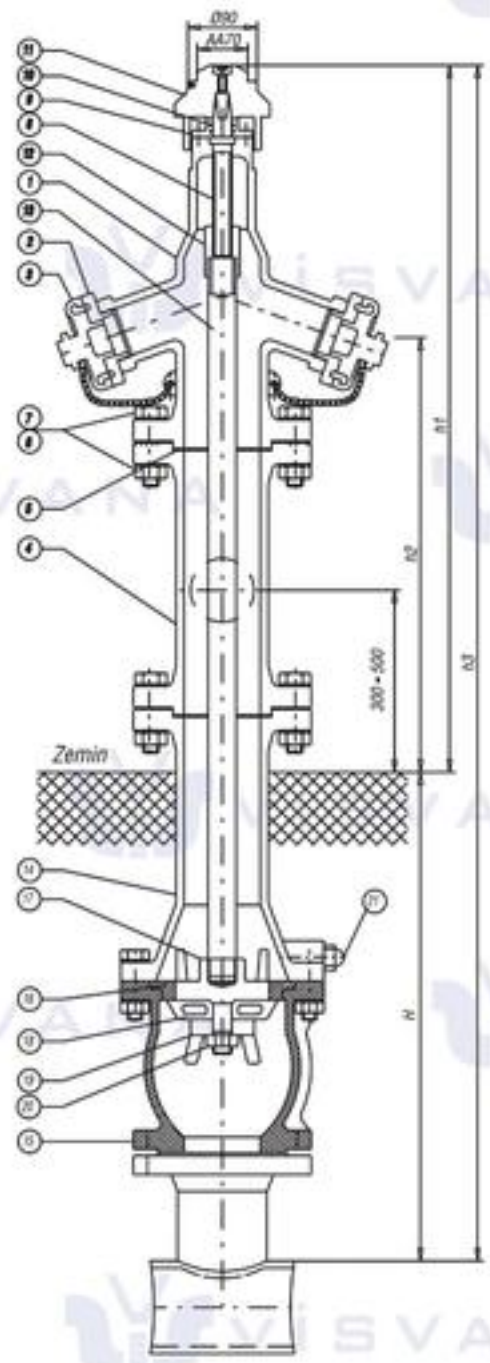

NO	PART NAME	PARÇA ADI	MATERIAL / MALZEME	NO	PART NAME	PARÇA ADI	MATERIAL / MALZEME
1	*Body*	Gövde	GG 25 / GGG-40-50	12	*Stem Nut*	Mil Somunu	Ms 58 / Bronze
2	*Coupling*	Kaplin	Al Alloy	13	*Shaft*	Mil	St 37
3	*Coupling Cover*	Kaplin Kapağı	Al Alloy	14	*Lower Pipe*	Alt Gövde	GG 25 / GGG-40/50
4	*Upper Pipe*	Üst Gövde	GG 25 / GGG-40-50	15	*Lower Body*	Alt Gövde Haznesi	GG 25 / GGG-40/50
5	*Gasket*	Baskı Burcu	EPDM	16	*Disc*	Disk	Ms 58 / Bronze
6	*Bolt*	Civata	5 D/SS	17	*Cone Upper Part*	Üst Baskı	GG 25 / GGG-40/50
7	*Nut*	Somun	5 D/Paslanmaz Çelik	18	*Valve Cone*	Kapama Elemanı	GG 25 + EPDM
8	*Stem*	Mil	AISI 304 / Ms-58	19	*Cone Lower Part*	Alt Baskı	GG 25 / GGG-40/50
9	*Gland*	Burç	Ms-58 / Bronze	20	*Nut*	Somun	5D / Paslanmaz Çelik
10	*O-Ring*	Oring	EPDM	21	*Drainage Plug*	Tahliye Tapası	Ms 58 / Bronze
11	*Cap*	Başlık	GG 25	22	*90° Elbow*	90° Dirsek	GG 25 / GGG-40/50

DN	h1 min.	h2 min.	h3 +80 -	H
80	1030	630	1435	550
			1750	900
100			2150	1250
			2400	1500

DN	Outlet Dimension Çıkış Ölçüsü	Debi / DIN 3222) Flowrate $(m/h)^3$	
		Tek Çıkış-Single	Çift Çıkış-Double
80	2"	110	140
100	2 1/2"	120	210

UNDER GROUND HYDRANT (SHORT TYPE)

YER ALTI YANGIN HİDRANTI

VKYV-10-16

Pressure Rate / Basınç Aralığı: PN10-PN16
Size Range / Ölçü Aralığı: DN80
Flange Ends / Flanş: DIN 3221 / TS 2821/2

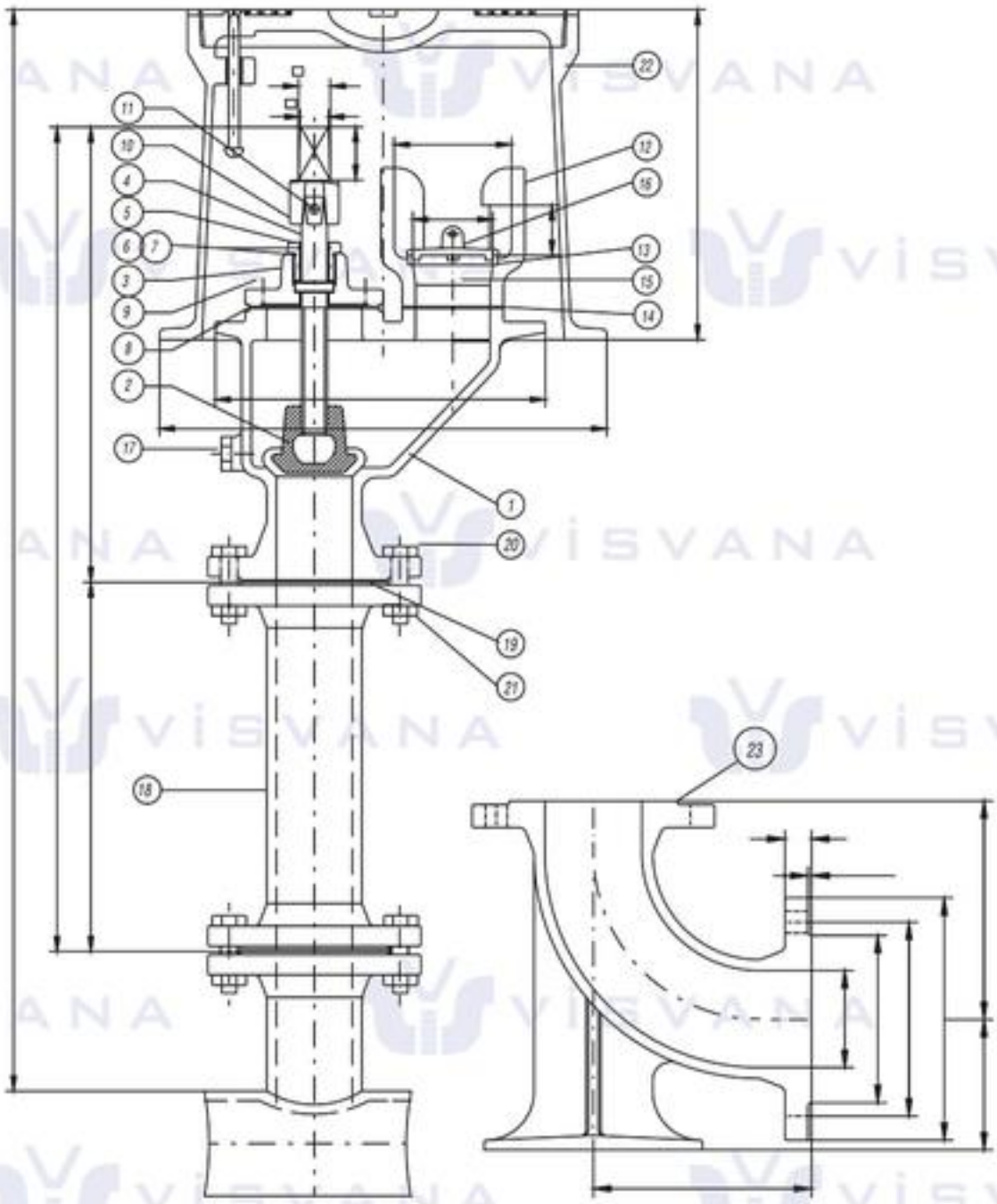

NO	PART NAME	PARÇA ADI	MATERIAL / MALZEME	NO	PART NAME	PARÇA ADI	MATERIAL / MALZEME
1	*Body*	Gövde	GG 25 / GGG-40-50	13	*Outlet Seat*	Kurt Ağzı Burcu	Ms 58 / AISI 304
2	*Valve Cone*	Kapama Elemanı	GG 25 / GGG-40-50	14	*Gasket*	Conta	EPDM
3	*Cover*	Kapak	GG 25 / GGG-40-50	15	*Bolt*	Civata	5 D / SS
4	*Stem*	Mil	AISI 304 / Ms-58	16	*Outlet Cover*	Kapak	GG 25
5	*O-Ring Nut*	O-Ring Somunu	AISI 304 / Ms-58	17	*Drainage Plug*	Tahliye Tapası	Ms 58 / Bronze
6	*O-Ring*	O-Ring	EPDM	18	*Lower Pipe*	Alt Gövde	GG 25 / GGG-40/50
7	*O-Ring*	O-Ring	EPDM	19	*Gasket*	Conta	EPDM
8	*Gasket*	Conta	EPDM	20	*Bolt*	Civata	5 D / SS
9	*Bolt*	Civata	5 D/SS	21	*Nut*	Somon	5D / Paslanmaz Çelik
10	*Shaft Cap*	Mil Başlığı	GG 25	22	*Surface Box*	Buşakle Kovası	GG 25
11	*Cotter Pin*	Kopilya	St 37 / AISI 304	23	*90° Elbow*	90° Dirsek	GG 25 / GGG-40/50
12	*Outlet*	Kurt Ağzı	GG 25 / GGG-40-50				

IRRIGATION HYDRANT / SULAMA HIDRANTLARI

Çift Çıkışlı / Double Exit

A1 TYPE

Tek Çıkışlı / Single Exit

A1 TYPE

Çift Çıkışlı / Double Exit

A2 TYPE

Tek Çıkışlı / Single Exit

A2 TYPE

∗ Teknik bilgi için iletişime geçiniz. / *Please contact for technical information.*

Diaphragm Valves, Pinch Valves, Sight Glasses

Diyaframlı Vanalar, Pinç Vanalar, Akış Göstergeleri

Products & Technical Data

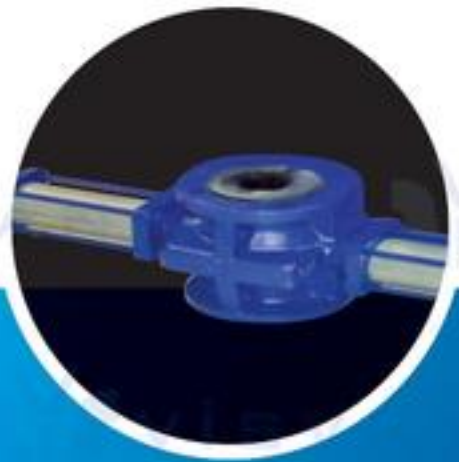

Teknik Bilgiler

www.visvana.com

VDVD-10-16 CLASS 150

DIAPHRAGM VALVE
DİYAFRAMLI VANA

Pressure Rate / Basınç Aralığı: PN10-16-40
Size Range / Ölçü Aralığı: DN15-DN500
Flange Ends / Flanş: TS 810 / DIN 2501
BS 4504 / ASA 125 / ASA 150

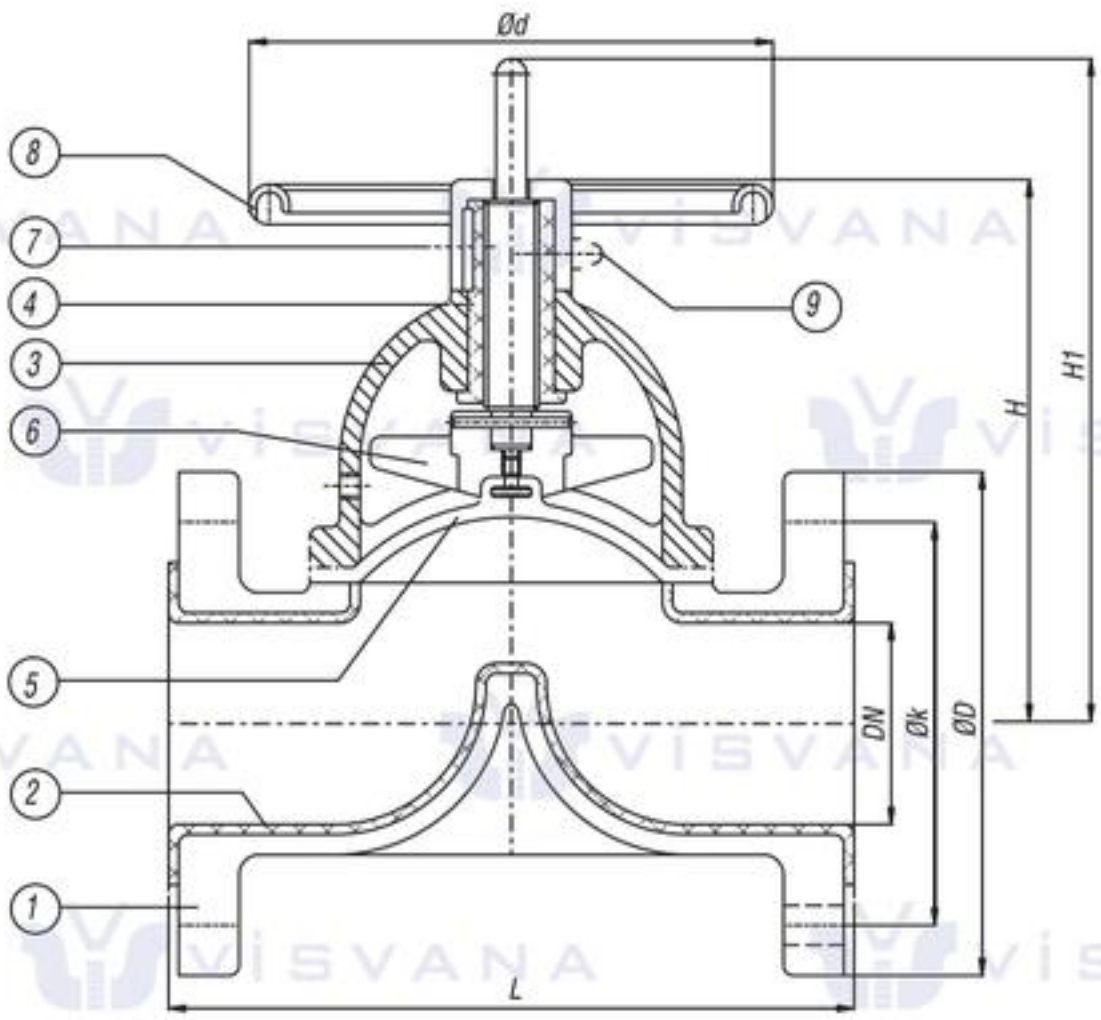

NO	PART NAME	PARÇA ADI	MATERIAL / MALZEME
1	*Body*	Gövde	GG 25 / GGG-40 / GS-C 25
2	*Rubber*	Astar	HRL / BL / HL
3	*Bonnet*	Kapak	GG 25 / GGG-40 / GS-C 25
4	*Bush*	Burç	Ms 58 / Bronze
5	*Membrane*	Diyafram	EPDM / BUNA-N
6	*Valve Head*	Klavuz	GG 25 / GGG-40 / GS-C 25
7	*Stem*	Mil	1,4021 / AISI 304
8	*Handwheel*	El Çarkı	GG 25 / St
9	*Oil Nipple*	Gresörlük	St

Nominal Pressure / Anma Basıncı *Nominal Diameter* / Anma Çapı			PN 10 / 16																	
		DN	15	20	25	32	40	50	65	80	100	125	150	200	250	300	350	400	450	500
Valve Dimensions / Vana Boyutları DIN3202/2-F1 BS 5156		DIN L	130	150	160	180	200	230	290	310	350	400	480	600	730					
		BS L	106	117	127	146	159	190	216	254	305	356	406	521	635	749	921	749	921	921
		H	75	100	110	125	145	175	195	235	265	320	375	530	630	730	810	775x2	850x2	875x2
		H1	75	100	110	150	170	205	235	280	330	400	460	645	775	930	1030	975x2	1070x2	1095x2
		Ød	80		100		120	140	160	200	250	280	320	360	400	500		630	800	
Flange Dimensions Flanş Ölçüleri DIN 2501 / TS 810 ASA 125 / ASA 150 BS 4504	PN 10	D	95	105	115	140	150	165	185	200	220	250	285	340	395	445	505	565	615	670
		k	65	75	85	100	110	125	145	160	180	210	240	295	350	400	460	515	565	620
	PN 16	D	95	105	115	140	150	165	185	200	220	250	285	340	405	460	520	580	640	715
		k	65	75	85	100	110	125	145	160	180	210	240	295	355	410	470	525	585	650
	PN 40	D	95	105	115	140	150	165	185	200	235	270	300	375	450	515	580	660	685	755
		k	65	75	85	100	110	125	145	160	190	220	250	320	385	450	510	585	610	670
	ASA 125 ASA 150	D	89	99	108	117	127	152,4	178	191	229	254	279,5	343	406	483	533	597	635	698,5
		k	60	70	79	89	98,5	120,7	139,7	152,4	190,5	216	241,3	298,5	362	432	476,3	539,8	578	635
Weight / Ağırlık (~ for iron)		kg	2,5	3	3	6,5	7	9	14	18	26	50	66	130	190	295				

PINCH VALVE
PİNÇ VANA

VPVV-10

Pressure Rate / Basınç Aralığı: PN 10
Flange Ends / Flanş: DIN EN 1092-1-2
Operation / Kumanda: Manual-Manuel, Pneumatic-Pnömatik

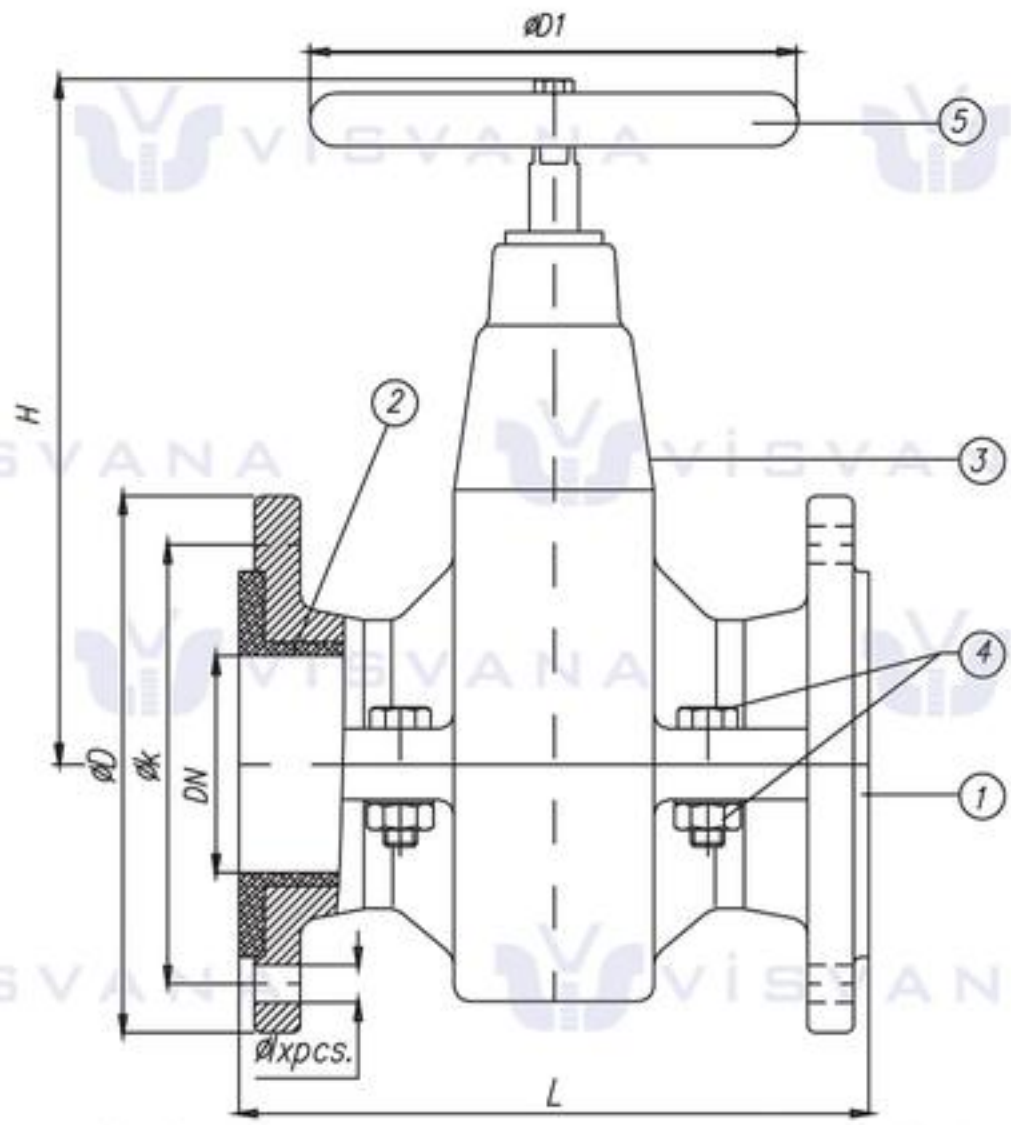

NO	PART NAME	PARÇA ADI	MATERIAL / MALZEME
1	*Upper Body*	Alt Gövde	GG 25 / GGG-40 / GS-C 25
2	*Sleeve*	Diyafram	NBR / NR
3	*Top Body*	Üst Gövde	GG 25 / GGG-40 / GS-C 25
4	*Bolt / Nut*	Civata / Somun	8,8 / 8
5	*Handwheel*	Volan	GG 25

Nominal Pressure / Anma Basıncı *Nominal Diameter* / Anma Çapı	PN 10										
	DN	40	50	65	80	100	125	150	200	250	300
Valve Dimensions / Vana Boyutları DIN 3202/2-F5/F15	L	165	178	190	203	300	325	350	400	450	500
	H	100	110	140	160	200	250	300	400	500	600
	D1.	160				200	250			315	
Flange Dimensions / Flanş Ölçüleri DIN EN 1092-1-2 PN 10	D	150	165	185	200	220	250	285	340	395	445
	k	110	125	145	160	180	210	240	295	350	400
	b	18	20		22	24	26			28	
	Ixpcs	18x4			18x8			22x8		22x12	
Weight / Ağırlık (~ for iron)	kg	5	8	15	20	25	30	40	50	105	140

VFAG-10-16-25-40

SIGHT GLASSES
AKIŞ GÖSTERGESİ

Pressure Rate / Basınç Aralığı: PN10-16-25-40
Flange Ends / Flanş: DIN EN 1092-1-2
DIN 3202/2-FT
Face to Face / L Boyu: DIN EN 558-1-1
Size Range / Ölçü Aralığı: DN 15-250

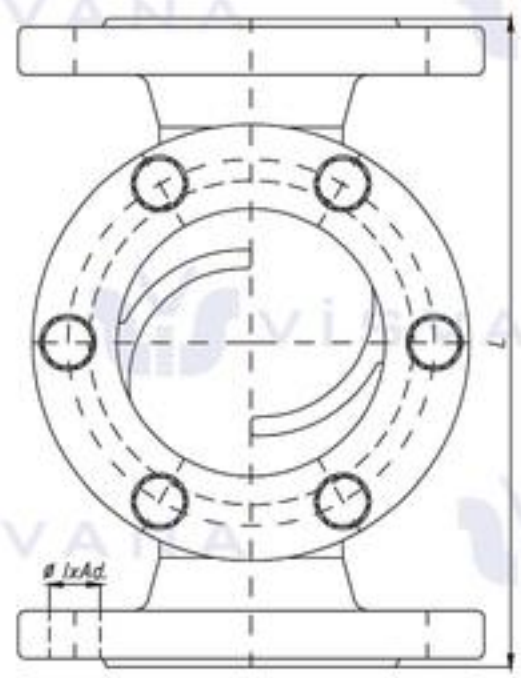

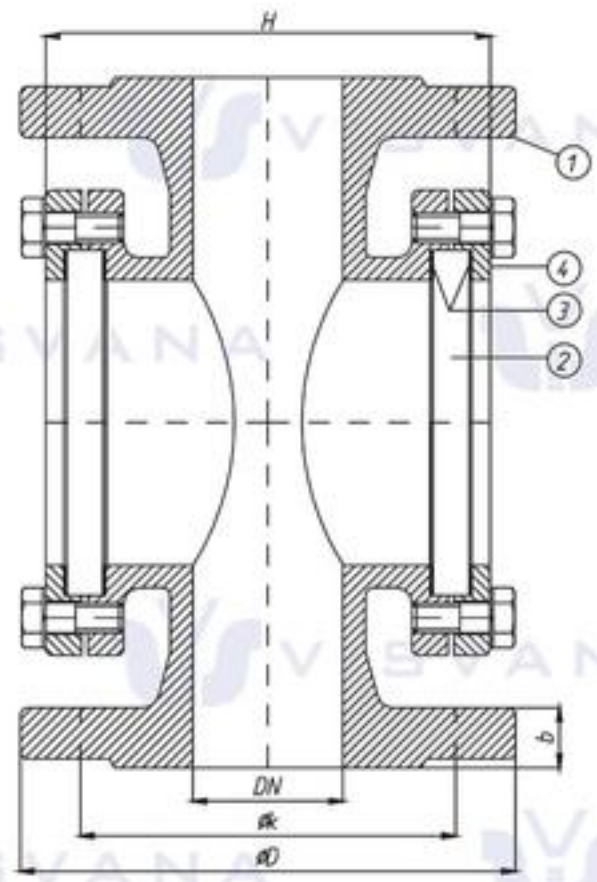

NO	PART NAME	PARÇA ADI	MATERIAL / MALZEME
1	*Body*	Gövde	GG 25 / GGG-40 / GS-C 25
2	*Glass*	Cam	Glass (Borosilicat DIN 7080)
3	*Seal*	Conta	Klingerit
4	*Cover*	Kapak	GG 25 / GGG-40 / GS-C 25

Nominal Pressure / Anma Basıncı		PN 10 - 16 - 25 - 40												
Nominal Diameter / Anma Çapı	DN	15	20	25	32	40	50	65	80	100	125	150	200	250
Valve Dimensions / Vana Boyutları DIN EN 558-1-1	L	130	150	160	180	200	230	290	310	350	400	480	600	730
	H	110	115	120	125	135	150	175	190	260	280	330	460	510
Flange Dimensions / Flanş Ölçüleri DIN EN 1092-1-2 PN 10	D	95	105	115	140	150	165	185	200	220	250	285	340	395
	k	65	75	85	100	110	125	145	160	180	210	240	295	350
Flange Dimensions / Flanş Ölçüleri DIN EN 1092-1-2 PN 16	D	95	105	115	140	150	165	185	200	220	250	285	340	405
	k	65	75	85	100	110	125	145	160	180	210	240	295	355
Flange Dimensions / Flanş Ölçüleri DIN EN 1092-1-2 PN 25	D	95	105	115	140	150	165	185	200	235	270	300	360	425
	k	65	75	85	100	110	125	145	160	190	220	250	310	370
Flange Dimensions / Flanş Ölçüleri DIN EN 1092-1-2 PN 40	D	95	105	115	140	150	165	185	200	235	270	300	375	450
	k	65	75	85	100	110	125	145	160	190	220	250	320	385
Weight / Ağırlık (~ for iron)	kg	4,5	5,5	7,5	10	15	17	26	33	42	52	95	52	95

ANSI Gate, Globe, Check, Ball, Plug, Butterfly Valves

ANSI Sürgülü, Buhar, Çek, Küresel, Blöf, Kelebek Vanalar

Products & Technical Data

Teknik Bilgiler

www.visvana.com

API GATE VALVE

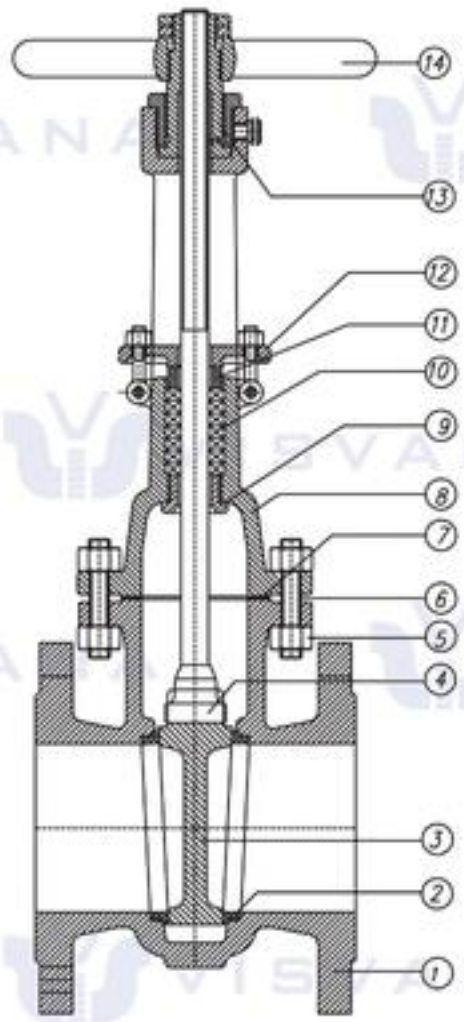

STANDARD MATERIAL TO API 600

Trim Code	Seat Ring Surface Part No.2	Wedge Surface Part No.3	Stem Part No.4	
1	F6	F6	F6	
2	F304	F304	F304	
5	Stellite	Stellite	F6	
8	Stellite	F6	F6	
9	Monel	Monel	Monel	
10	F316	F316	F316	
13	Alloy 20	Alloy 20	Alloy 2	

Note: Usually, trim2 and trim 10 are not adopted because the sealing face would be destroyed easily.

Standards

Design and Manufacture	API 600, API6D
Inspection and Test	API598, API6D, API600
End Flange dimension	ASME B16.5
End Flange dimension	ASME B16.47 A, MSS SP-44
End Flange dimension	ASME B16.47 B, API605
BW end dimension	ASME B16.25
Face to face	ASME B16.10
Pressure-temperature ratings	ASME B16.34

Standard Material specifications

Parts name		Carbon steel to ASTM		Alloy Steel to ASTM				Stainless Steel to ASTM			
1	Body	A216 WCB	A352 LCB	A217 WCI	A217 WC6	A217 WC9	A217 C5	A351 CF8	A351 CF8M	A351 CF3	A351 CF3M
8	Bonnet	A216 WCB	A352 LCB	A217 WCI	A217 WC6	A217 WC9	A217 C5	A351 CF8	A351 CF8M	A351 CF3	A351 CF3M
6	Bolts	A193 B7	A320 L7	A193 B7	A193 B16	A193 B16	A193 B16	A193 B8	A193 B8	A193 B8	A193 B8
5	Nuts	A194 2H	A194 4	A194 2H	A194 4	A194 4	A194 4	A194 8	A194 8	A194 8	A194 8
11	Gland	A182 F6a	A182 F6a	A182 F6a	A182 F6a	A182 F6a	A182 F6a	A182 F304	A182 F316	A182 F304L	A182 F316L
12	Gland Flange	A216 WCB	A352 LCB	A217 WCI	A217 WC6	A217 WC9	A217 C5	A351 CF8	A351 CF8M	A351 CF3	A351 CF3M
2	Disc	A216 WCB	A352 LCB	A217 WCI	A217 WC6	A217 WC9	A217 C5	A351 CF8	A351 CF8M	A351 CF3	A351 CF3M
7	Gasket	SS Spiral Wound W/graphite, or SS Spiral Wound W/PTFE, or Reinforced PTFE									
10	Packing	Braided graphite, or Die-formed graphite ring or PTFE									
13	Stem Nut	Copper alloy or A439 D2									
14	Hand Wheel	Ductile iron or Carbon steel									

Noted: The chart above only lists out some common composition of steel gate valve parts, we may provide other different parts material composition according to the customer's request or the actual valve working condition.

API GATE VALVE

VYM-C150

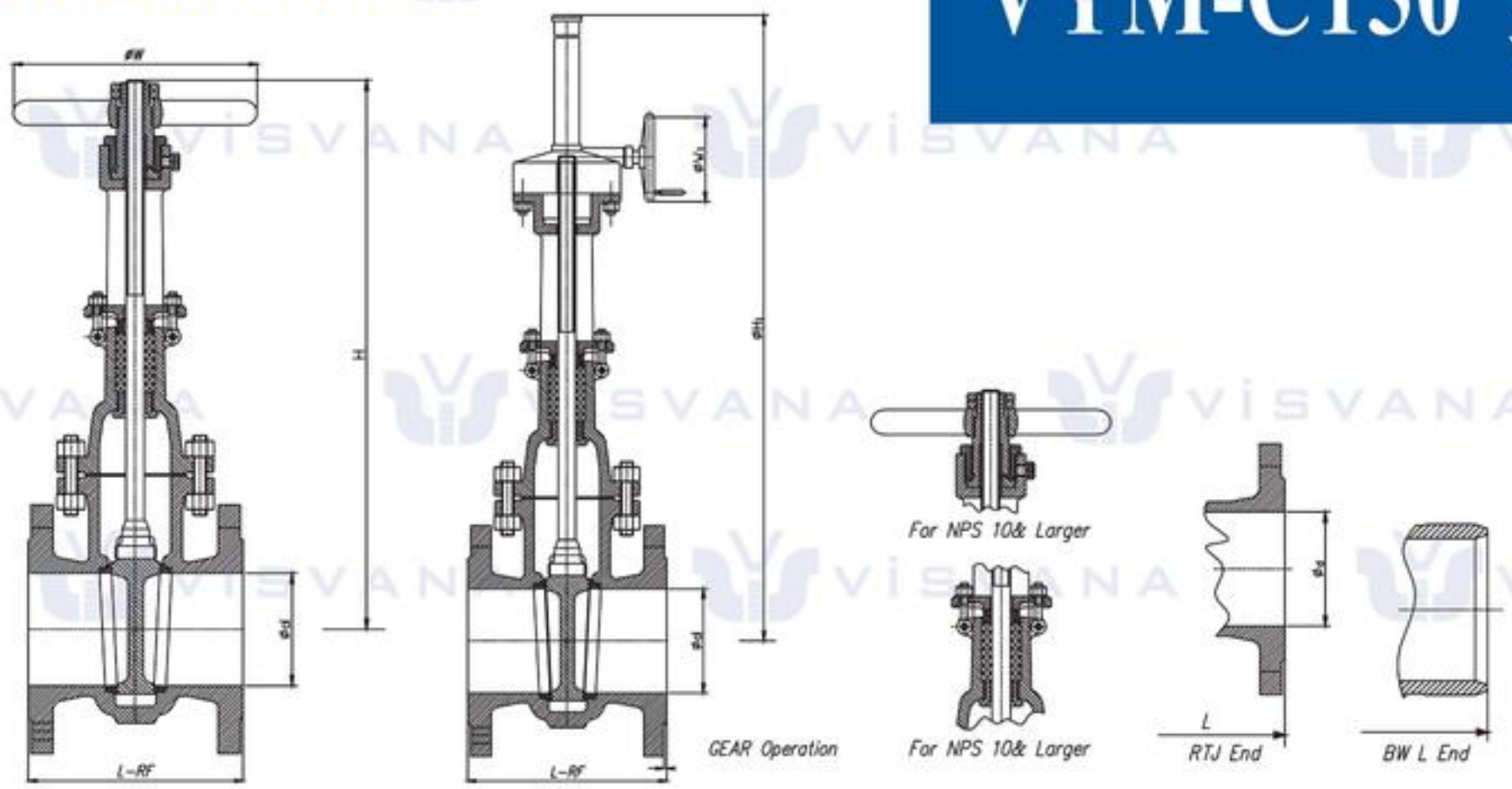

Class 150 & JIS 10K Gate Valve

Class	Size		Dimensions (mm)								Weight (kg)	
	NPS	DN	L			d	H	H1	W	W1	H.W	G.O
			RF	RTJ	BW							
150 10K	½	15	108	119	108	14	218		120		4	
	¾	20	117	130	117	19	190		120		5	
	1	25	127	140	127	25	256		140		7	
	1 1/4	32	140	153	140	31	268		180		10	
	1 1/2	40	165	178	165	38	326		200		15	
	2	50	178	191	216	30	340		200		20	
	2 1/2	65	191	203	241	63	365		200		23	
	3	80	203	216	283	76	410		250		36	
	4	100	229	241	305	100	485		280		54	
	5	125	254	267	381	127	520		280		62	
	6	150	267	279	403	150	595	795	300	310	82	104
	8	200	292	305	419	200	755	1015	360	310	136	150
	10	250	330	343	457	250	895	1210	400	310	196	215
	12	300	356	368	502	300	1040	1405	450	460	299	315
	14	350	381	394	572	336	1145	1535	500	460	381	451
	16	400	406	419	610	387	1333	1780	500	460	536	597
	18	450	432	445	660	438	1420	1900	600	460	608	651
	20	500	457	470	711	488	1635	2220	700	530	827	863
	24	600	508	521	813	590	1862	2557	800	530	1202	1357
	26	650	559		864	633		2680		530	1281	1550
	28	700	610		914	684		2890		530		1880
	30	750	610		914	735		3110		600		2300
	32	800	711		965	779		3280		600		2550
	34	850	711		1016	830		3500		600		2950
	36	900	711		1016	874		3640		600		3390
	40	1000	812.8		1067			4200		1000		4042
	48	1200	1067		1168			5020		1000		5520

Noted: We may provide other different actuators according to the customer's request, such as pneumatic, electric, hydraulic actuators, the details of them according to the actual valve working condition.

VYM-C300

API GATE VALVE

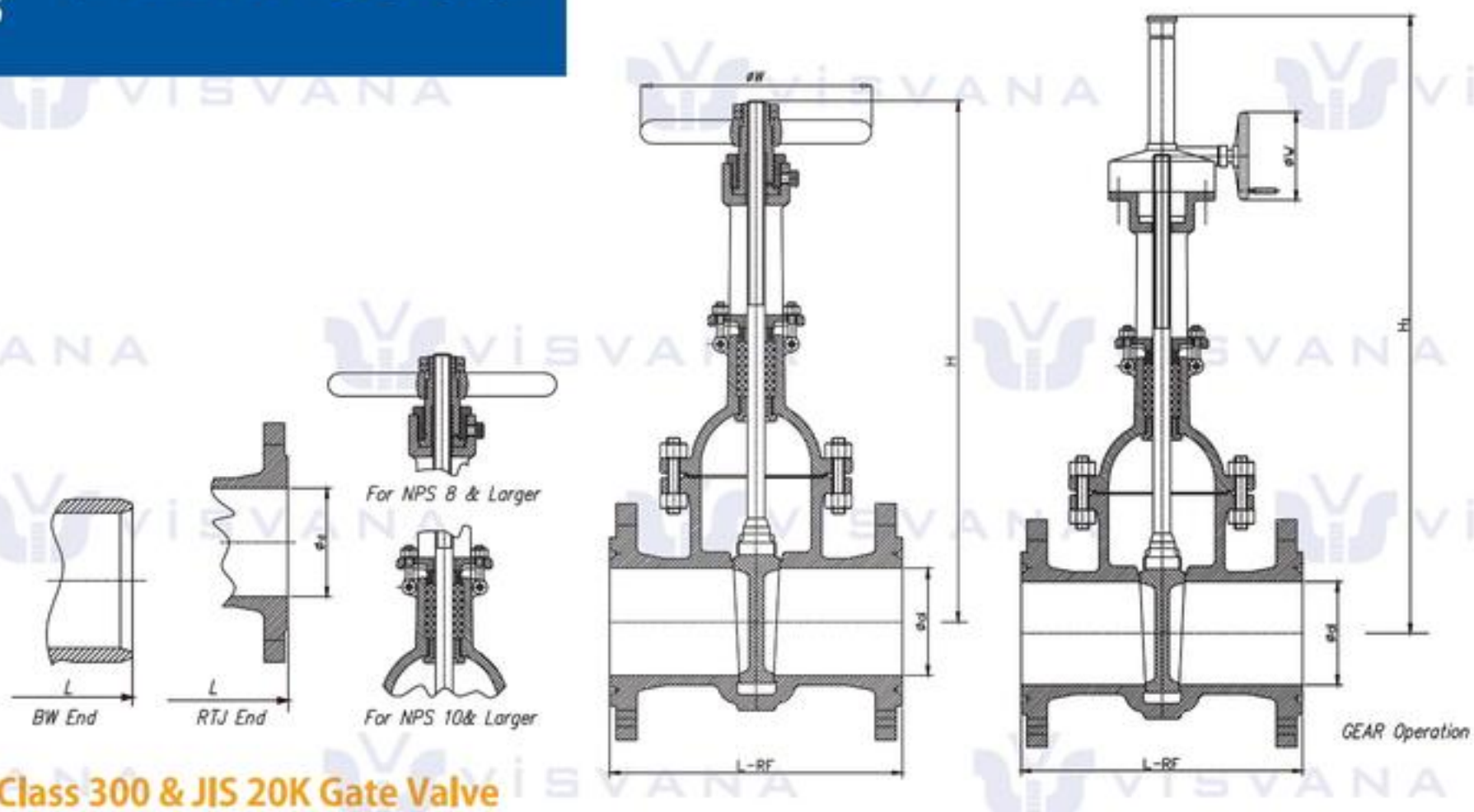

Class 300 & JIS 20K Gate Valve

Class	Size		Dimensions (mm)								Weight (kg)	
	NPS	DN	L			d	H	H1	W	W1	H.W	G.O
			RF	RTJ	BW							
300 20K	½	15	140	151	140	14	198		120		6	
	¾	20	152	165	152	19	215		140		7	
	1	25	165	178	165	25	220		160		8,5	
	1 1/4	32	178	191	178	31	306		180		15	
	1 1/2	40	190	203	190	38	342		200		18	
	2	50	216	232	216	50	364		200		26	
	2 1/2	65	241	257	241	63	385		200		36	
	3	80	283	298	283	76	460		250		55	
	4	100	305	321	305	100	540	650	280	310	67	100
	5	125	381	397	381	127	548	750	300	310	99	126
	6	150	403	419	403	150	649	835	350	310	147	186
	8	200	419	435	419	200	798	1030	400	310	228	235
	10	250	457	473	457	250	940	1255	450	460	332	416
	12	300	502	518	502	300	1129	1460	500	460	502	512
	14	350	762	778	762	336	1195	1585	600	460	715	756
	16	400	838	854	838	387	1340	1830	500	460	850	965
	18	450	914	930	914	431	1503	2000	650	460	1100	1224
	20	500	991	1010	991	482	1625	2175	750	530	1300	1400
	24	600	1143	1165	1143	584	1965	2620	900	530	2200	2385
	26	650	1245	1270	1245	633		2850		600		3000
	28	700	1346	1372	1346	684		3080		600		3300
	30	750	1397	1422	1397	735		3180		600		3550
	32	800	1524	1553	1524	779		3300		600		4400
	34	850	1626	1654	1626	830		3550		600		5200
	36	900	1727	1756	1727	874		3760		600		6050
	40	1000	1956					4340		1000		8100

Noted: We may provide other different actuators according to the customer's request, such as pneumatich, electric, hydraulic actuators, the details of them according to the actual valve working condition.

API GATE VALVE

VYM-C600
VYM-C900

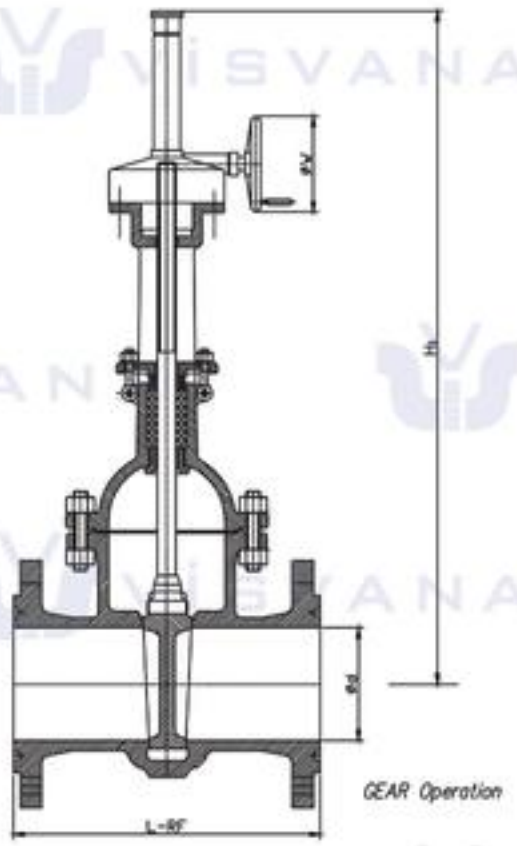

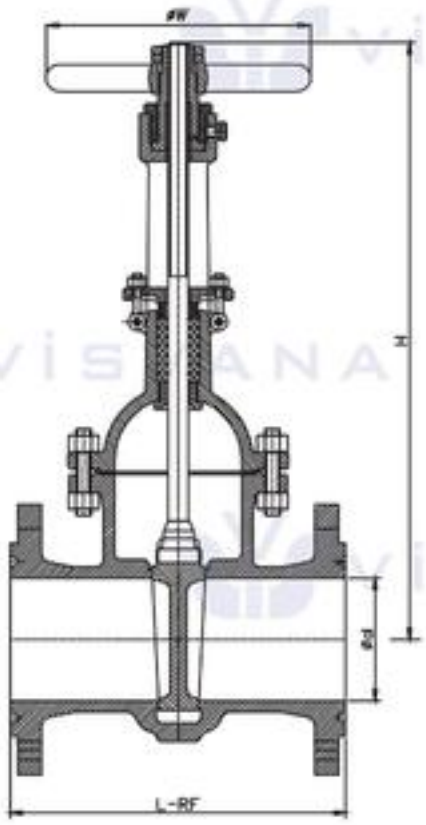

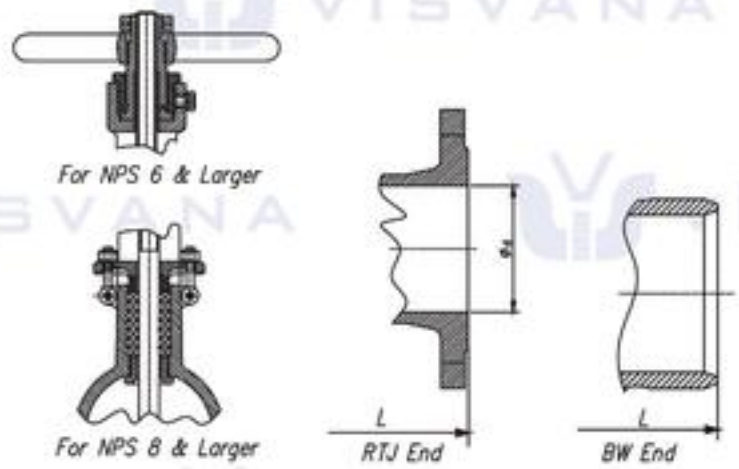

Class 600 & Class 900 Gate Valve

Class	Size		Dimensions (mm)								Weight (kg)	
	NPS	DN	L			d	H	H1	W	W1		
			RF	RTJ	BW						H.W	G.O
600	2	50	292	295	292	50	380		200		37	
	2 1/2	65	330	333	330	63	420		250		50	
	3	80	356	359	356	76	500	585	280	310	82	87
	4	100	432	435	432	100	575	695	300	310	134	142
	5	125	508	511	508	127	700	790	350	310	175	227
	6	150	559	562	559	150	750	900	450	460	245	286
	8	200	660	664	660	199	850	1110	500	460	423	472
	10	250	787	791	787	247	1005	1300	650	460	682	657
	12	300	838	841	838	298	1130	1650	700	460	932	893
	14	350	889	892	889	326	1270	1750	900	530	1177	1318
	16	400	991	994	991	374	1365	1900	900	530	1513	1720
	18	450	1092	1095	1092	419		2020		600		1980
	20	500	1194	1200	1194	463		2172		600		2460
	24	600	1397	1407	1397	558		2650		600		3650
900	2	50	368	371	368	47	500		280		70	
	2 1/2	65	419	422	419	57	450		280		110	
	3	80	381	384	381	72	505		300	310	140	167
	4	100	457	460	457	98	575	625	350	310	178	227
	5	125	559	562	559	125	630	740	400	310	258	285
	6	150	610	613	610	146	795	900	500	460	358	396
	8	200	737	740	737	190	885	1000	650	460	550	627
	10	250	838	841	838	238	1035	1130	700	530	1000	1100
	12	300	965	968	965	282	1180	1520	900	530	1215	1310
	14	350	1029	1038	1029	311	1350	1600	900	530	1600	1665
	16	400	1130	1140	1130	355	1890	2100	900	600	2150	2330
	18	450	1219			400		2232		800		3000
	20	500	1321			444		2435		800		3800

Noted: We may provide other different actuators according to the customer's request, such as pneumatich, electric, hydraulic actuators, the details of them according to the actual valve working condition.

VYM-C1500
VYM-C2500

API GATE VALVE

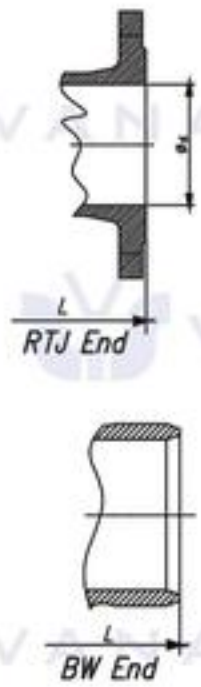

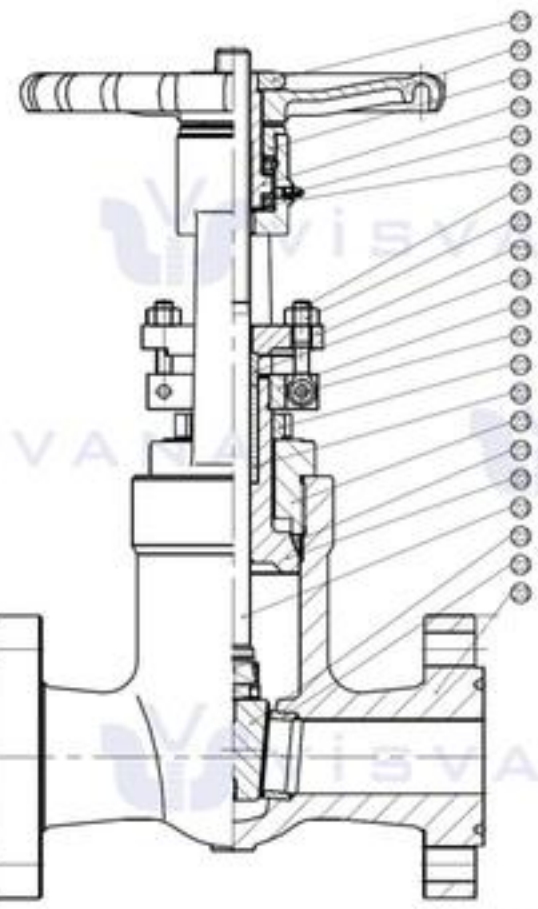

Class 1500& Class 2500 Gate Valve

Class	Size		Dimensions (mm)									Weight (kg)	
	NPS	DN	L				d	H	H1	W	W1	H.W	G.O
			RF	RTJ	BW (BB)	BW (PSB)							
1500	2	50	368	371	368	216	47	430		280		70	
	2 1/2	65	419	422	419	254	57	490		300		110	
	3	80	470	473	470	305	69	540	680	350	310	175	202
	4	100	546	549	546	406	92	650	810	400	310	270	300
	5	125	673	676	673	483	125	780	920	450	310	378	405
	6	150	705	711	705	559	136	835	1035	500	460	520	575
	8	200	832	841	832	711	177	925	1180	750	530	820	915
	10	250	991	1000	991	864	222	1230	1525	900	600	1560	1750
	12	300	1130	1146	1130	991	263		1620		600		2120
	14	350	1257	1276	1257	1067	288		1905		600		3306
	16	400	1384	1407	1384	1194	330		2050		600		3450
2500	2	50	451	454	451	279	38	490	580	280	310	100	130
	2 1/2	65	508	514	508	330	47	580	630	300	310	150	180
	3	80	578	584	578	368	57	630	765	350	310	245	275
	4	100	673	683	673	457	72	725	850	400	310	390	420
	5	125	794	807	794	533	96	900	960	500	460	550	580
	6	150	914	927	914	610	111	1040	1100	600	530	780	835
	8	200	1022	1038	1022	762	146	1150	1150	750	460	1260	1355
	10	250	1270	1292	1270	914	184	1400	1460	900	600	2380	2565
	12	300	1422	1445	1422	1041	218		1660		600		3250

Noted: We may provide other different actuators according to the customer's request, such as pneumatich, electric, hydraulic actuators, the details of them according to the actual valve working condition.

API FORGED STEEL GATE VALVE

VYDC 800 / VYDC 900
VYDC 1500 / VYDC 2500

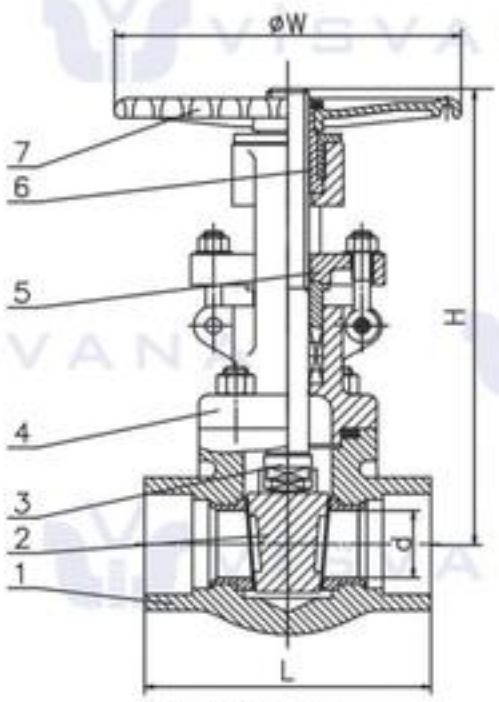

Bolted Bonnet
Socket-Welding End

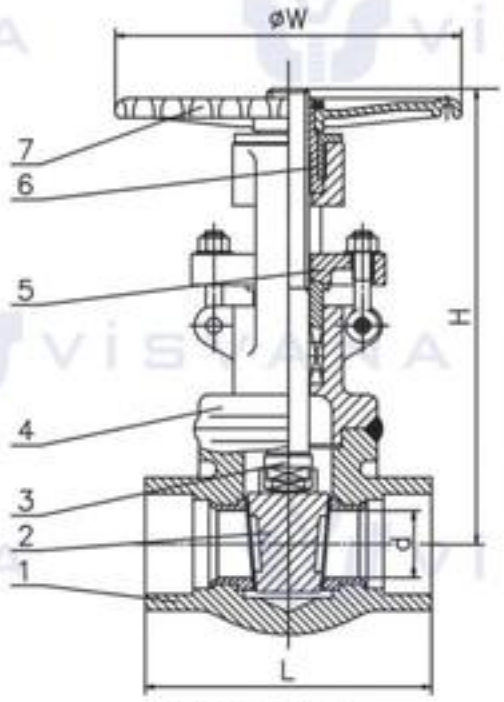

Welded Bonnet
Socket-Welding End

Standards

Design and Manufacture	API 602
Inspection and Test	API598
Socket-weld dimension	ASME B16.11
End threads dimension	ASME B1.20.1
Pressure-temperature ratings	ASME B16.34

Part Name			Material	
1	Body	ASTM A105	ASTM A182F304	ASTM A182F316
2	Disc	ASTM A105	ASTM A182F304	ASTM A182F316
3	Stem	ASTM A182F6	ASTM A182F304	ASTM A182F316
4	Bonnet	ASTM A105	ASTM A182F304	ASTM A182F316
5	Gland Flange	ASTM A105	ASTM A182F304	ASTM A182F316
6	Stem Nut	ASTM A276 Gr.410		
7	Handwheel	ASTM A197		

Class 150 & Class 1500 Forged steel Gate Valve

Class	Size		Dimensions (mm)				NPT	Weight (kg)
	NPS	DN	L	d	H	W		
150 - 800	1/2"	15	79	13	153	100	1/2"	2.0
	3/4"	20	92	13	153	100	3/4"	2,2
	1"	25	111	18	185	125	1"	3,6
	1 1/4"	32	120	29	222	160	1 1/4"	6,2
	1 1/2"	40	120	29	240	160	1 1/2"	6,2
	2"	50	140	36,5	279	180	2"	9,7
900 - 1500	1/2"	15	92	13	181	125	1/2"	3,5
	3/4"	20	111	13	181	125	3/4"	4.0
	1"	25	120	18	218	160	1"	6.0
	1 1/4"	32	120	24	237	160	1 1/4"	7.0
	1 1/2"	40	140	29	274	180	1 1/2"	10,8
	2"	50	160	36,8	319	200	2"	15,5
2500	1/2"	15	150	14	284	160	1/2"	10.0
	3/4"	20	150	14	284	160	3/4"	12,8
	1"	25	170	19	327	200	1"	22,5
	1 1/4"	32	200	25	374	250	1 1/4"	31,7
	1 1/2"	40	200	28	377	250	1 1/2"	33.0
	2"	50	250	35	434	300	2"	38.0

Forged Steel
Ball Valve

Forged Steel
Ball Valve

Folating
Ball Valve

STEEL BALL VALVE

Ball valve is suitable for using on varios kinds of pipelines of class 150 to class 2500 to turn or off the pipeline medium. Our steel valvehave two types: floating ball valve and trunnion ball valve, floating ball valve usually class 150lb-600lb, size ½-8", the operation types include worn gear, manual, pneumatic or electric actuators.

BALL VALVE DESING CONSTRUCTION AND SPECIFICATIONS

Our cast steel ball valve conform to API 608, API 16D, ANSI B16.34 AND BS5351. Each is tested according to API1598, API16D and marking is per MSS-SP-25.

CONSTRUCTION AS FOLLOWS

Full bore/reduced bore
Turn 90 degree opening or close
Detachable seat PTFE/RPTFE

Reliable seat seal
Fire safe desing
Reliable stem seal
Anti-static device
Worng operation prevention

STANDARDS AND SPECIFICATION

Desing & manufacture:API6D, API608, ASME B16.34, ANSI AWWA C507 MSS SP-72 AWWAC507, MSS SP-72, BS 5351, BS6364 BFCI 70-2, ISO 5211, NACE MR0175.
Connectionends: ASME B16.5, ASME B16.47, API605, MSS SP-44, ISO7005-1, JIS B2238, BS12627, ASME B16.11, BS 1276
Face to face dimension:ASME B16.10, ISO 5752, BS 558, BS 12982
Testing & inspection: API1598, API 6D, API 607, API 6FA, BS 6755, BS 12569, MSS SP-82, MSS SP-60
Normal pressure Or rating: Class 150~Class2500, JIS10K~20K, PN10~PN420
Normal diameter or bore: NPS1/2~NPS10, DN15~DN250
Aplicable temperature: -196˚C - 540˚C
Operation type: Manual, worm gear, pneumatic, electric

Construction and features of floating ball valve

RELIABLE SEAT SEAL

The structure desing of elastic sealing ring has been adopted for floating ball valves. When the pressure of medium is low, the contact area between valve seat insert and ball is relatively small, thus providing high sealing load to ansure dependable seating seal. When the pressure of medium is high, the contact area between valve seat insert and ball is relatively large, so that valve seat insert can endure the considerable medium thrust and without any damage.

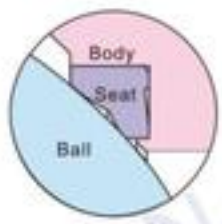

At lower medium pressure

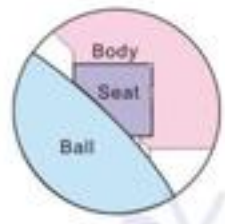

At higher medium pressure

FIRE SAFE DESING

In case of fire, the non-metal material parts such as seat sealing ring of PTFE, stem back seat gasket, gland packing and the sealing gasket between body and bonnet might be damaged due to the high temperature. As show in the figure, our specially designed structure of secondary metal seal is provided to effectively prevent both internal and external leakage of the valve. This desing can meet requirement of AP1607.

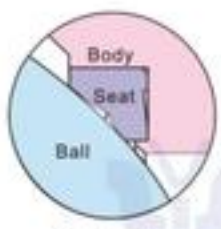

Before fire

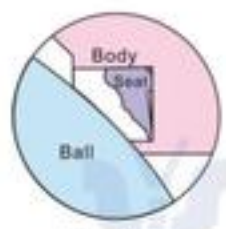

After fire

ANTI BLOWOUT STEM

The Anti-blowout desing has been adopted fort he stem to ensure that even if the pressure in the body cavity risen accidently and the packing flange becomes invalid, the stem may not be blown out by medium. To prevent these possibilities, the stem is designed with a backseat, being assembled from underneath. The sealing force against the back seats higher as the medium pressure becomes higher. So the stem can be assured under variable medium pressure.

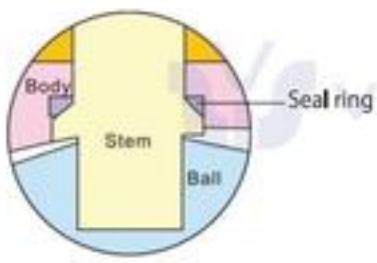

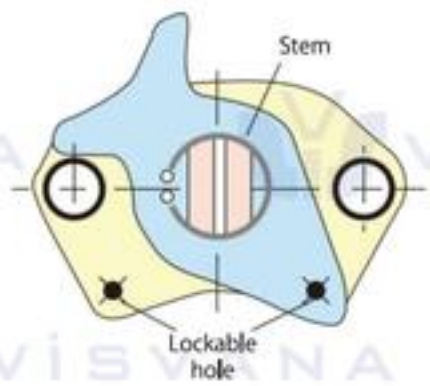

WRONG OPERATION PREVENTION

To prevent the ball valve from wrong operation. The fully opened or closed position of valve can be locked up, especially when are mounted outdoors or when valves are not allowed to be opened or closed by technical process.

ANTI STATIC DEVICE

As required by customers, an anti static device can be placed on the valve to derive the electic charge is accumulated on the ball from the static channel between the ball and stem, or between the stem and valve body.

API FLOATING BALL VALVE

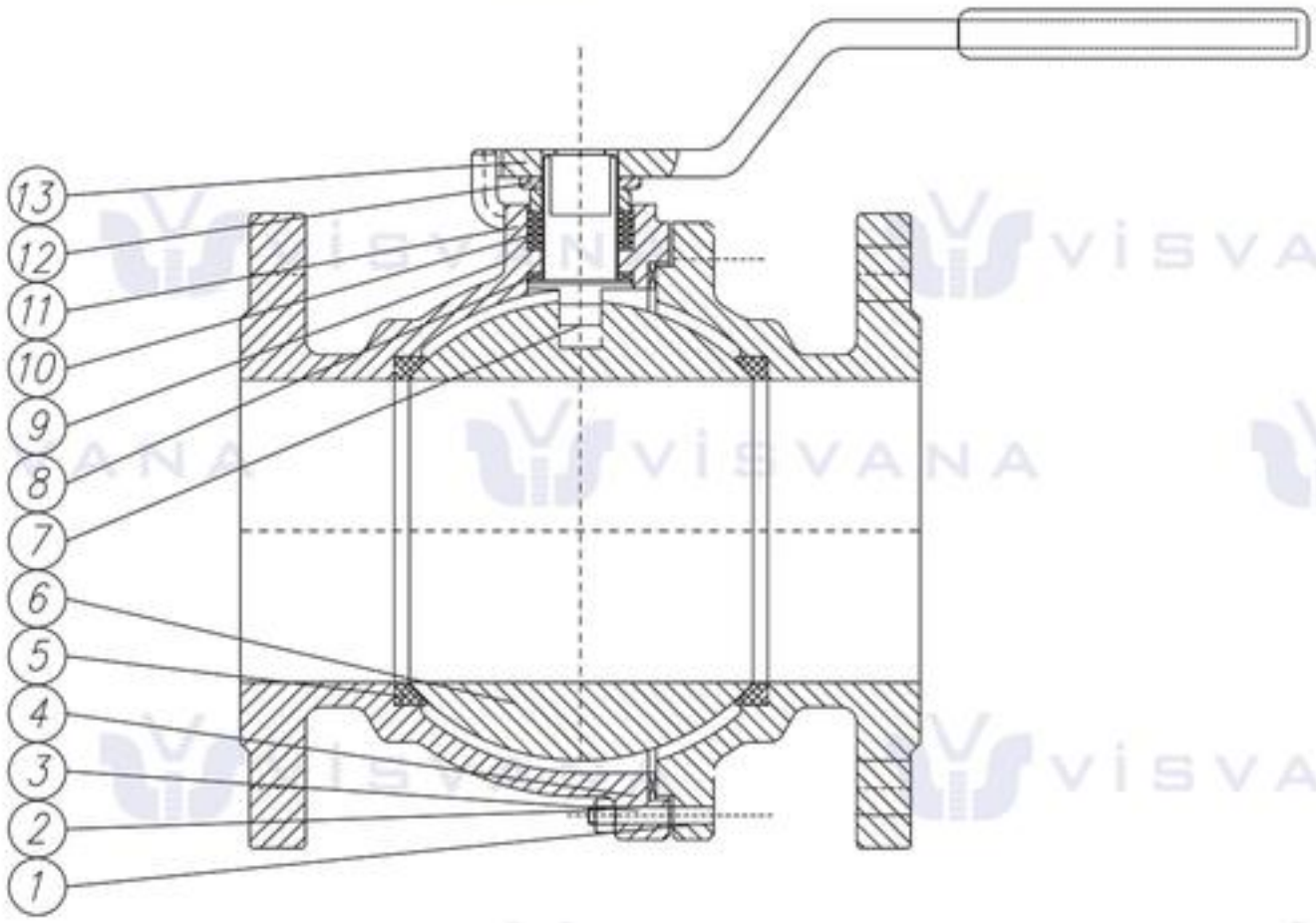

Floating ball valve

Bolted bonnet, Two-pieces Body, floating Ball
Full or Reduced bore, Anti Blowout stem.
Fire safe and Anti Static.
Stainless steel ball
ASTM A216 WCB, A351 CF8, A351 CF8M, A351 CF3, A351 CF3M, A351 CN7M

Standards compliance

Design and Manufacture: API 608, API6D, BS5351
Face to face(end to end):ANSI B 16.10, API6D, JIS B 2002
Flanged connection: ANSI B16.5, JISB2212-2214
Fire-safe:API607, API6 FA
Butt welded end:ANSI B16.25
Test and inspection:API598, API6D, JIS B2003

Parts and material list

Parts No	Parts Name	Material				
		WCB/13Cr	WCB/304	WCB/316	WCB/304	CF8M/316
1	Body	ASTM A216 WCB	ASTM A216 WCB	ASTM A216 WCB	ASTM A351 CF8	ASTM A351 CF8M
10	Packing	PTFE	PTFE	PTFE	PTFE	PTFE
11	Gland flange	ASTM A216 WCB	ASTM A216 WCB	ASTM A216 WCB	ASTM A351 CF8	ASTM A351 CF8M
12	Stop collar	Carbon steel	Carbon steel	Carbon steel	Carbon steel	Carbon steel
13	Lever	Carbon steel	Carbon steel	Carbon steel	Carbon steel	Carbon steel
8	Thrust washer	PTFE	PTFE	PTFE	PTFE	PTFE
7	Stem	ASTM A182 F6a	ASTM A182 F304	ASTM A182 F316	ASTM A182 F304	ASTM A182 F316
6	Ball	ASTM A182 F6a	ASTM A182 F304	ASTM A182 F316	ASTM A182 F304	ASTM A182 F316
5	Seat	Reinforced PTFE	Reinforced PTFE	Reinforced PTFE	Reinforced PTFE	Reinforced PTFE
9	Gasket	PTFE	PTFE	PTFE	PTFE	PTFE
2	Body nut	ASTM A194 2H	ASTM A194 2H	ASTM A194 2H	ASTM A194 8	ASTM A194 8M
3	Body bolting	ASTM A193 B7	ASTM A193 B7	ASTM A193 B7	ASTM A193 B8	ASTM A193 B8M
4	Closure	ASTM A216 WCB	ASTM A216 WCB	ASTM A216 WCB	ASTM A351 CF8	ASTM A351 CF8M

Noted: the chart above only lists out some common composition of steel ball valve parts, we may provide other different parts material composition according to the customer's request or the actual valve working condition.

API FLOATING BALL VALVE

VFTBV-C150 / VFTBV-C300
VFTBV-C600 / VFTBV-C900
VFTBV-C1500

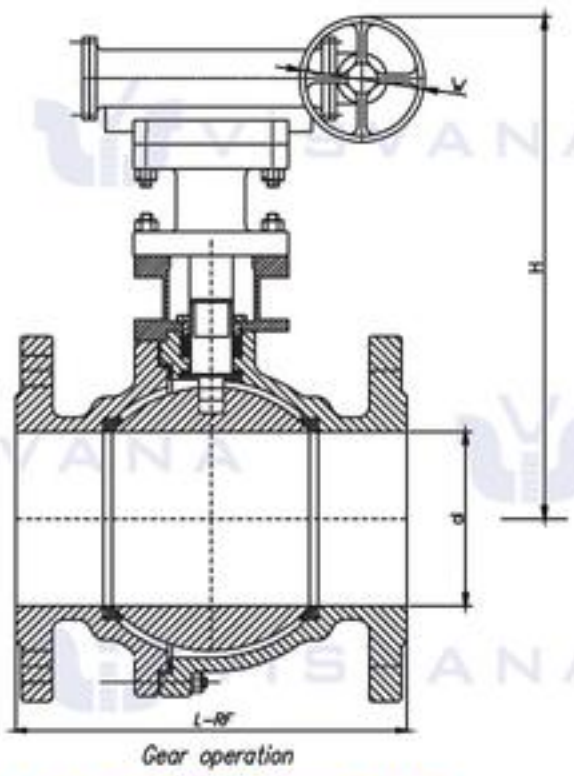

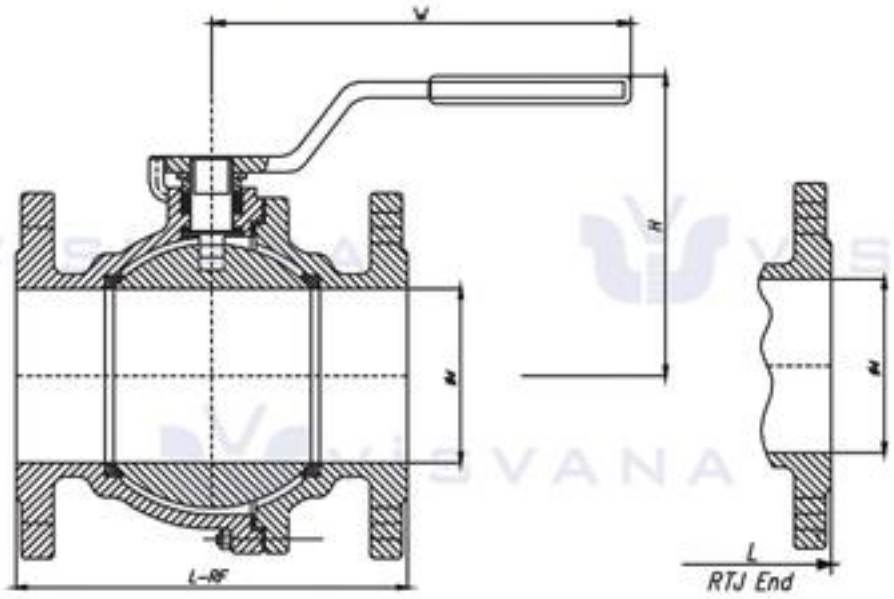

Main size and weight

Class	Size		Dimensions (mm)							Weight (Kg)	
	DN	NPS	L			Hand wheel	Gear box	Hand wheel	Gear box	Hand wheel	Gear box
			d	RF	RTJ						
150 10K	15	½	13	108	119	140		85		3	
	20	¾	19	117	130	140		90		3,2	
	25	1	25	127	140	150		99		3,5	
	32	1 1/4	32	140	153	180		105		5	
	40	1 1/2	38	165	178	300		165		6	
	50	2	49	178	191	350		140		11	
	65	2 1/2	62	190	203	350		180		13,5	
	80	3	75	203	216	500		235		19	
	100	4	100	229	242	500	305	250	380	29	53
	125	5	127	356	369	800	305	280	405	49	79
	150	6	150	394	407	800	305	310	460	65	102
	200	8	201	457	470	1000	305	350	550	115	185
	250	10	252	533	546		400		706		280
300 20K	15	½	13	140	151	140		85		3	
	20	¾	19	152	165	140		90		5	
	25	1	25	165	178	150		99		6	
	32	1 1/4	32	178	191	180		105		8	
	40	1 1/2	38	190	203	200		126		11	
	50	2	49	216	232	250		142		16	
	65	2 1/2	62	241	257	300		165		23	
	80	3	74	283	299	350		178		30	52
	100	4	100	305	321	500	305	230	330	47	76
	125	5	127	381	397	800	305	280	380	74	124
	150	6	150	403	419	800	305	310	420	107	163
	200	8	201	502	518	1000	305	350	480	153	267
600	15	½	13	165	164	140		79	560	5	
	20	¾	19	190	190	140		83		7	
	25	1	25	216	216	200		114		9	
	32	1 1/4	32	229	229	200		120		13	
	40	1 1/2	38	241	241	250		125		17	
	50	2	49	292	295	300		156		25	
	65	2 1/2	62	330	333	350		172		42	
	80	3	74	356	359	500	305	220	370	56	76
	100	4	100	432	435	650	305	250	400	85	123
900	15	½	13	216	216	150		98		9	
	20	¾	19	229	229	150		105		13	
	25	1	25	254	254	200		110		16	
	32	1 1/4	32	279	279	250		120		24	
	40	1 1/2	38	305	305	250		125		31	
	50	2	49	368	371	350		160		45	
1500	15	½	13	216	216	182		98		10	
	20	¾	19	229	229	250		125		14	
	25	1	25	254	254	250		130		17	
	32	1 1/4	32	279	279	300		155		25	
	40	1 1/2	38	305	305	350		180		33	
	50	2	49	368	371	450		225		48	

Noted: We may provide other different actuators according to the customer's request, such as pneumatich, electric, hydraulic actuators, the details of them according to the actual valve working condition.

Seating structure

According to some special working conditions and customer's requirement, we provide the trunnion ball valve with the Bi-sealing design structure i.e. Seat sealing in front of the ball and seat sealing behind the ball, thus the reliable sealing of the valve is ensured because the valve can perform normally even if one of the effective sealing designs becomeslost due to the abnormal condition.

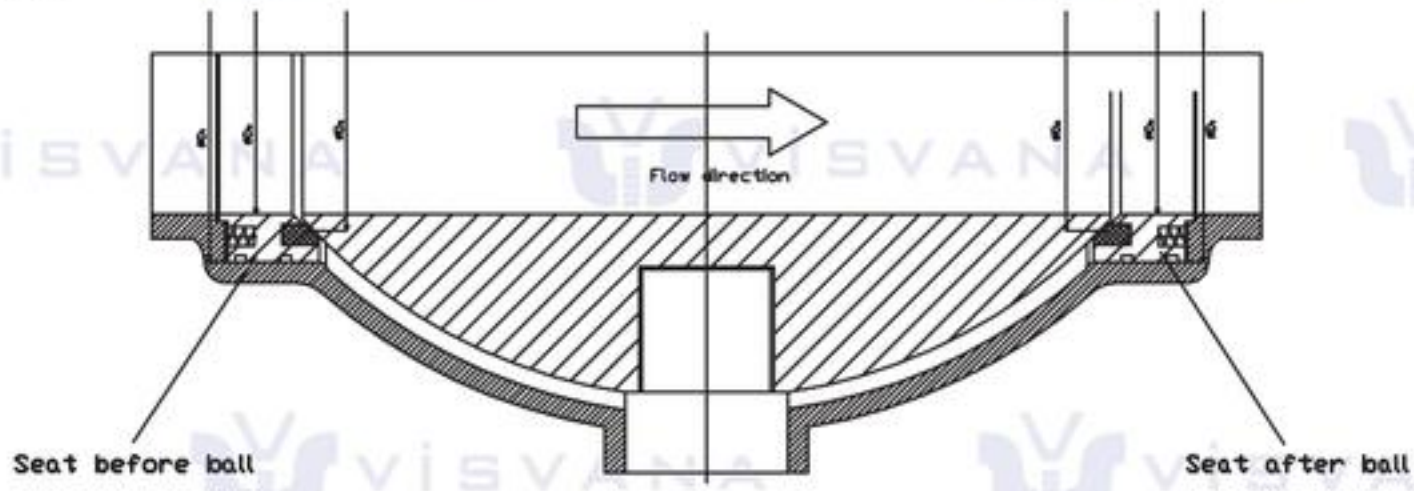

Fire safe design

In case of fire, the non-metal material parts such as seat sealing ring of PTFE, o-ring for the stem, and sealing gasket for body and bonnet, might be damaged due to high temperature. As showed in the figure, our special design structure of secondary metal to metal or the graphite seal is provided for the trunnion ball valve to effectively prevent both internal and external leakage of the valve. This design can meet the requirement of API 1607

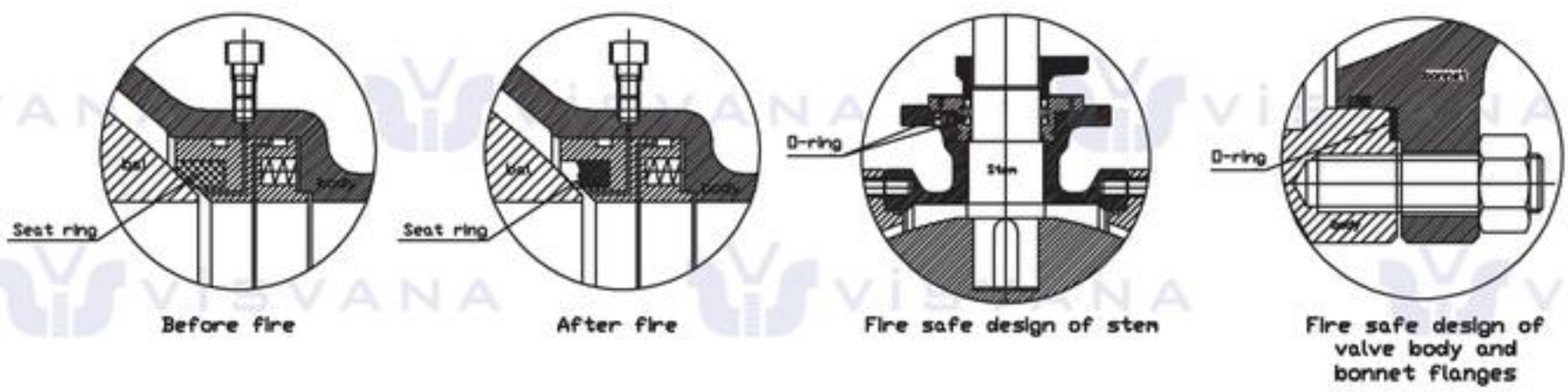

Anti blowout stem

Anti blowout structure is provided with for the stem, which is positioned by the up-end cap and screw, being guaranteed not to be blown-out by the medium even if even if at abnormal risen pressure in the cavity.

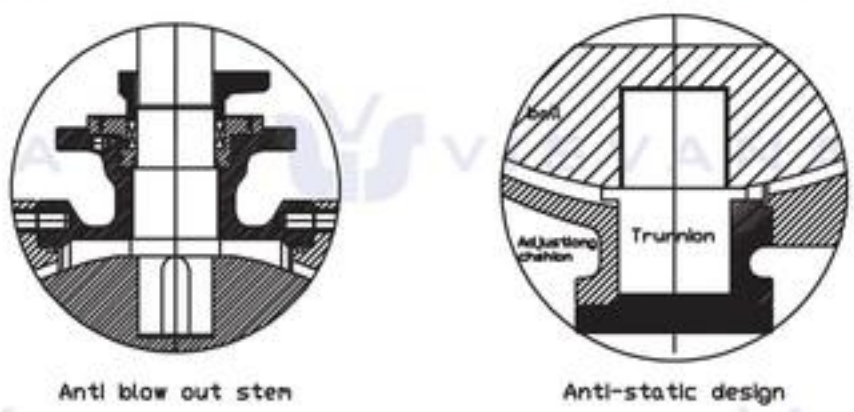

Anti-static design

the ball of the trunnion ball valve gets closed with each other trought trunnion, adjusting cushion, and down-end cap, the passage of static electricity thus forms together with the valve, which may lead the static electricity caused by sparks generated by friction between the ball and seat during on and off performance to the ground to prevent the possible of fire or explosion.

API TRUNNION BALL VALVE

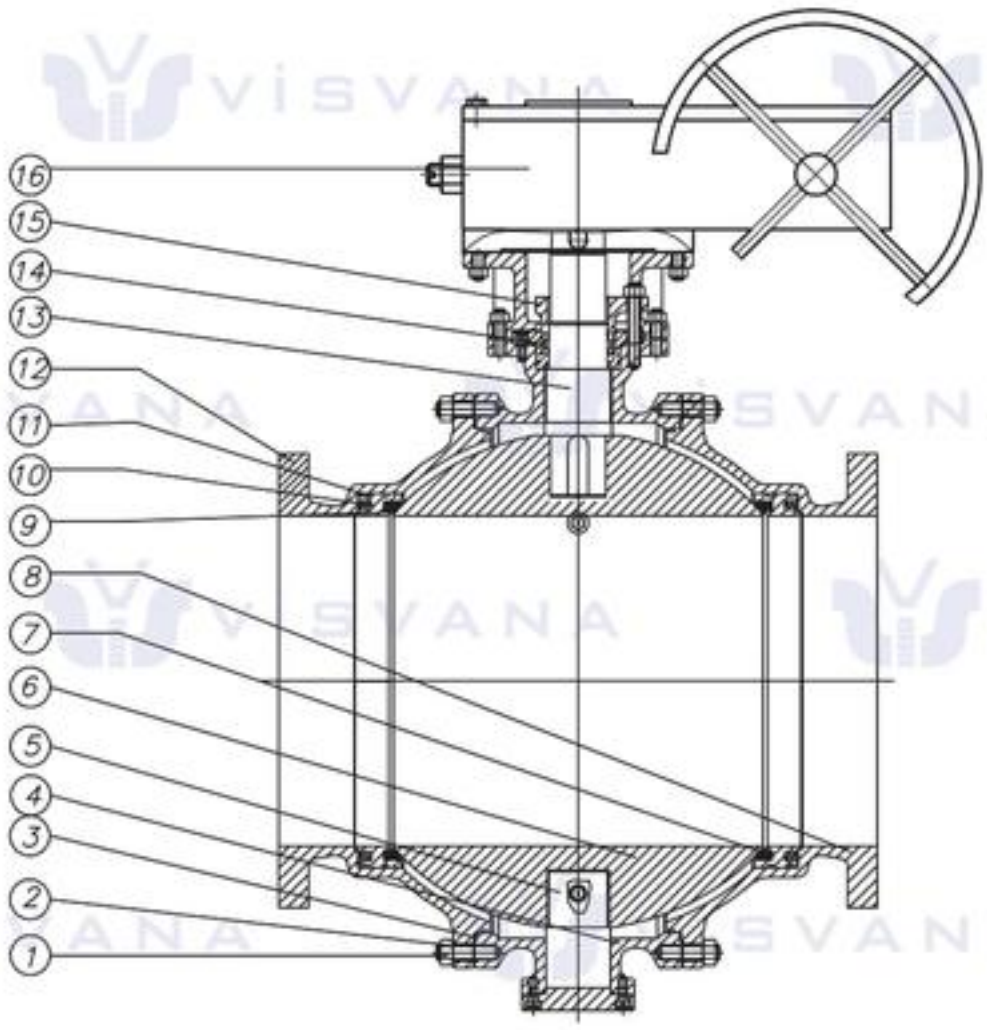

Class 150-1500 cast steel Trunnion ball valve

Bolted cover, Two-piece or three-piece Body,
Anti Blowout stem.
Fire safe and Anti static
ASTM A216 WCB, A351 CF8, A351 CF8M,
A351 CF3, A351 CF3M, A351 CN7M

Standarts compliance

Design and Manufacture : API 6D, API 608
Face to face (end to end) : API 6D
Flanged connection : ANSIB16.5
Fire-safe : AP1607, API6FA
Butt welded and : ANSIB16.25
Test and inspection : API6D, API598

Parts and material list

Parts No	Parts Name	Material				
		WCB/13Cr	WCB/304	WCB/316	CF8/304	CF8M/316
4	Body	ASTM A216 WCB	ASTM A216 WCB	ASTM A216 WCB	ASTM A351 CF8	ASTM A351 CF8M
10	O ring	Viton	Viton	Viton	Viton	Viton
13	Stem	ASTM A182 F6a	ASTM A182 F304	ASTM A182 F316	ASTM A182 F304	ASTM A182 F316
15	Gland	ASTM A105	ASTM A105	ASTM A105	ASTM A182 F304	ASTM A182 F316
16	Gear	Carbon Steel/Gray Iron	Carbon Steel/Gray Iron	Carbon Steel/Gray Iron	Carbon Steel/Gray Iron	Carbon Steel/Gray Iron
6	Ball	ASTM A182 F6a	ASTM A182 F304	ASTM A182 F316	ASTM A182 F304	ASTM A182 F316
9	Seat	Reinforced PTFE	Reinforced PTFE	Reinforced PTFE	Reinforced PTFE	Reinforced PTFE
14	O ring	Viton	Viton	Viton	Viton	Viton
7	Seat ring	ASTM A105	ASTM A105	ASTM A105	ASTM A182 F304	ASTM A182 F316
11	Spring	SS304 or inconel 750	SS304 or inconel 750	SS316 or inconel 750	SS304 or inconel 750	SS316 or inconel 750
1	Body bolting	ASTM A193 B7	ASTM A193 B7	ASTM A193 B7	ASTM A193 B8	ASTM A193 B8
2	Body nut	ASTM A194 2H	ASTM A194 2H	ASTM A194 2H	ASTM A194 8	ASTM A194 8
8	Cover	ASTM A216 WCB	ASTM A216 WCB	ASTM A216 WCB	ASTM A351 CF8	ASTM A351 CF8M
3	Gasket	PTFE	PTFE	PTFE	PTFE	PTFE
5	Low trunnion	ASTM A105	ASTM A105	ASTM A105	ASTM A182 F304	ASTM A182 F316
12	Cover	ASTM A216 WCB	ASTM A216 WCB	ASTM A216 WCB	ASTM A351 CF8	ASTM A351 CF8M

Noted: the chart above only lists out some common composition of steel ball valve parts, we may provide other different parts material composition according to the customer's request or the actual valve working condition.

VTTBV-C150
VTTBV-C300

API TRUNNION BALL VALVE

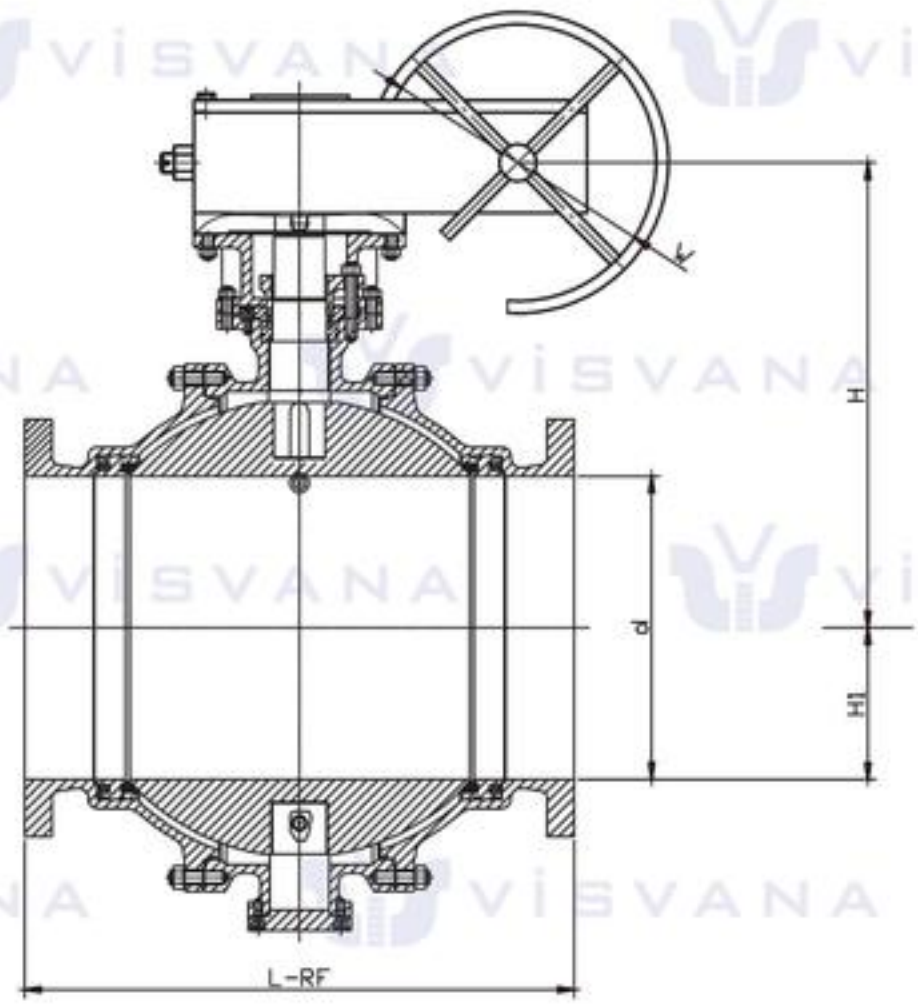

API Trunnion Ball Valve

Class	Size		Dimensions (mm)						Weight (Kg)
			L						
	DN	NPS	RF	BW	d	H	H1	W	
150 10k	100	4	229	305	100	250	135	300	60
	125	5	356	381	127	260	165	300	80
	150	6	394	457	150	285	193	400	101
	200	8	457	521	201	325	240	400	166
	250	10	533	559	252	370	293	500	283
	300	12	610	635	303	415	340	500	463
	350	14	686	762	334	455	372	600	622
	400	16	762	838	385	500	415	600	900
	450	18	864	914	436	540	462	600	1150
	500	20	914	991	487	590	511	600	1360
	600	24	1067	1143	589	680	601	600	2514
	650	26	1143	1245	633	800	700	600	3200
	700	28	1245	1346	684	960	780	700	4000
	750	30	1295	1397	735	1200	830	700	4800
	800	32	1372	1524	779	1380	870	700	5800
	900	36	1524	1727	874	1650	970	700	8000
300 20k	100	4	305	305	100	205	140	300	70
	125	5	381	381	127	260	170	300	95
	150	6	403	457	150	285	192	400	128
	200	8	502	521	201	325	246	400	234
	250	10	568	559	252	370	303	500	403
	300	12	648	635	303	415	348	500	602
	350	14	762	762	334	455	378	600	803
	400	16	838	838	385	500	429	600	1273
	450	18	914	914	436	540	518	600	1450
	500	20	991	991	487	590	540	600	1700
	600	24	1143	1143	589	690	650	600	3100
	650	26	1245	1245	633	800	750	700	4500
	700	28	1346	1346	684	960	800	700	6000
	750	30	1397	1397	735	1200	860	700	7500
	800	32	1524	1524	779	1380	900	800	9000
	900	36	1727	1727	874	1650	1020	800	12000

Noted: We may provide other different actuators according to the customer's request, such as pneumatich, electric, hydraulic actuators, the details of them according to the actual valve working condition.

API TRUNNION BALL VALVE

VTTBV-C600 / VTTBV-C900
VTTBV-C1500 / VTTBV-C2500

API Trunnion Ball Valve

Class	Size		Dimensions (mm)							Weight (Kg)
	DN	NPS	L			d	H	H1	W	
			RF	RTJ	BW					
600	50	2	292	295	292	49	140	94	300	32
	65	2 1/2	330	333	330	62	155	115	300	47
	80	3	356	359	356	74	190	136	300	68
	100	4	432	435	432	100	220	152	300	106
	125	5	508	511	508	127	245	180	300	170
	150	6	559	562	559	150	300	209	400	241
	200	8	660	664	660	201	345	263	600	444
	250	10	787	791	787	252	405	312	600	668
	300	12	838	841	838	303	445	354	600	1050
	350	14	889	892	889	334	505	389	600	1317
	400	16	991	994	991	385	580	440	700	1800
	450	18	1092	1095	1092	436	700	530	700	2400
	500	20	1194	1200	1194	487	890	560	700	3000
	600	24	1397	1407	1397	538	1050	670	800	5400
900	50	2	368	371	368	49	170	98	300	45
	65	2 1/2	419	422	419	62	195	120	300	55
	80	3	381	384	381	74	220	140	350	94
	100	4	457	460	457	100	245	162	350	141
	125	5	559	562	559	127	305	188	400	230
	150	6	610	613	610	150	335	213	400	325
	200	8	737	740	737	201	370	270	600	580
	250	10	838	841	838	252	475	322	600	850
	300	12	965	968	965	303	590	360	700	1330
	350	14	1029	1038	1029	322	700	400	700	1660
	400	16	1130	1140	1130	372	850	460	800	2280
1500	40	1 1/2	305	305	305	38	280	100	300	44
	50	2	368	371	368	49	320	113	300	67
	65	2 1/2	419	422	419	64	340	125	300	80
	80	3	470	473	470	74	385	138	300	130
	100	4	546	549	546	100	415	171	300	192
	125	5	673	676	673	125	480	200	400	335
	150	6	705	711	705	144	580	222	400	475
	200	8	832	841	832	192	584	280	400	820
	250	10	991	1000	991	239	650	340	500	1320
	300	12	1130	1146	1130	287	700	370	600	2050
2500	40	1 1/2	384	387	384	38	290	105	300	72
	50	2	451	454	451	42	320	120	300	104
	65	2 1/2	508	514	508	52	350	130	300	140
	80	3	578	584	578	62	400	150	300	202
	100	4	673	683	673	87	425	180	400	305
	125	5	794	807	794	100	500	210	400	530
	150	6	914	927	914	131	590	230	500	760
	200	8	1022	1038	1022	179	610	290	500	1200
	250	10	1270	1292	1270	223	660	350	600	2080

API GLOBE VALVE

THE FEATURES OF GLOBE VALVE

Bolted bonnet: outside screw and yoke: rising stem: metallic seating surfaces.

BODY AND BONNET CONNECTİON

The body and bonnet of class 150~class900 globe valves are usually with studs and nuts. And the body and bonnet of class 1500~class2500 globe valve are usuallyt of pressure seal desing.

GASKET OF COVER FLANGE

Stainless steel+flexible graphite wounded gasket is used for class 150 and class 300 globe valve. Stainless steel+flexible graphite wounded gasket is used for class 600, and ring joint gasket is also optional for class 600. Ring joint gasket is used for class900 globe valve. Pressure seal desing is used for class 1500~class2500 globe valve.

ACTUATION

Handwheel and gear box is usually used for globe valve actuation. Chain Wheel and electirc actuator can be also used for globe valve actuation if being requested by the customers.

SEAT

For carbon steel globe valve, the seat is usually forged steel. The sealing surface of the seat is spray welded, whit hard alloy specified by the customer. The seat have two type: welded on seat and integral seal, for stainless globe valve, integral seat is usually adopted, or to weld hard alloy directly integrally. If the customer have any other request about the seat, please kindly advise before placing the order.

API GLOBE VALVE

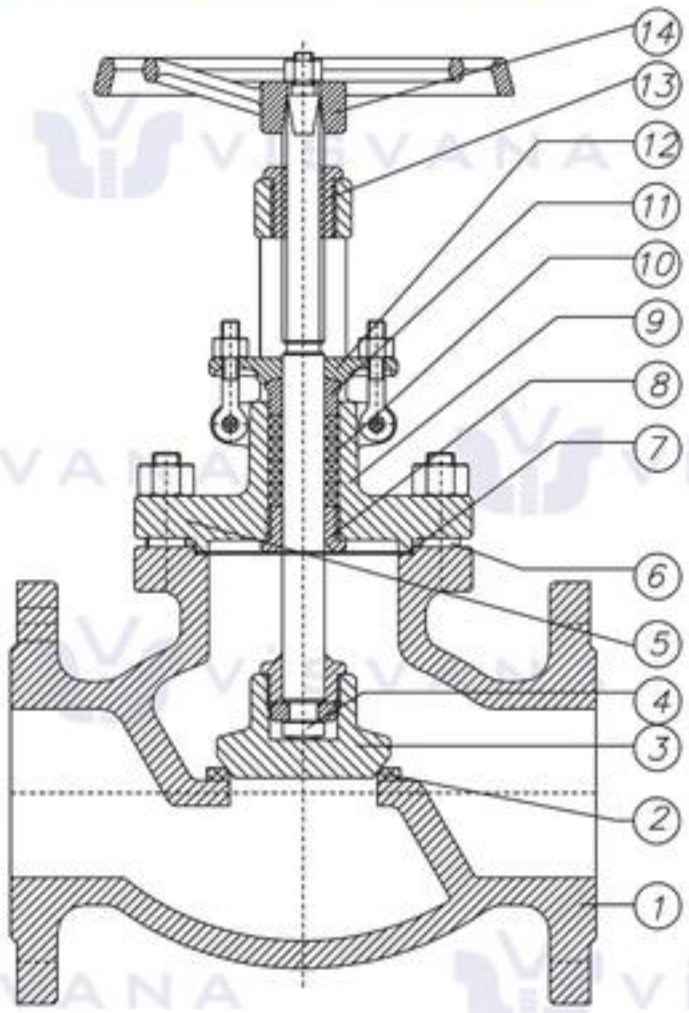

STANDARD MATERIAL TO API600

Trim Code	Seat Ring Surface Part No.2	Wadge Surface Part No.3	Stem Part No.4	Backseat Part No.8
1	F6	F6	F6	F6
2	F304	F304	F304	F304
5	Stellite	Stellite	F6	F6
8	Stellite	F6	F6	F6
9	Monel	Monel	Monel	Monel
10	F316	F316	F316	F316
13	Alloy 20	Alloy 20	Alloy 2	Alloy 20

Standards

Design and Manufacture	BS 1873 and ASME B16.34
Inspection and Test	API598
End Falnge dimension	ASME B16.5
BW end dimension	ASME B16.25
Socket-weld dimension	ASME B16.11
Face to face	ASME B16.10
Pressure-temperature ratings	ASME B16.34

Part and material list

Parts name		Carbon steel to ASTM		Alloy Steel to ASTM				Stainless Steel to ASTM			
1	Body	A216WCB	A352LCB	A217WC1	A217WC6	A217WC9	A217WC5	A351CF8	A351CF8M	A351CF3	A351CF3M
9	Bonnet	A216WCB	A352LCB	A217WC1	A217WC6	A217WC9	A217WC5	A351CF8	A351CF8M	A351CF3	A351CF3M
6	Bolt	A193 B7	A320 L7	A193 B7	A193 B16	A193 B16	A193 B16	A193 B8	A193 B8	A193 B8	A193 B8
5	Nut	A194 2H	A194 2H	A194 2H	A194 4	A194 4	A194 4	A194 8	A194 8	A194 8	A194 8
11	Gland	A182 F6a	A182 F6a	A182 F6a	A182 F6a	A182 F6a	A182 F6a	304	316	304L	316L
12	Gland Flange	A216WCB	A352LCB	A217WC1	A217WC6	A217WC9	A217WC5	A351CF8	A351CF8M	A351CF3	A351CF3M
3	Disc	A216WCB	A352LCB	A217WC1	A217WC6	A217WC9	A217WC5	A351CF8	A351CF8M	A351CF3	A351CF3M
7	Gasket	SS Spiral Wound W/graphite or SS Spiral Wound W/PTFE, or Reinforced PTFE									
10	Packing	Braided graphite or Die-formed graphite ring or PTFE									
13	Stem Nut	Copper alloy or A439 D2									
14	Hand Wheel	Ductile iron or Carbon steel									

Noted: The chart above only lists out some common composition of steel globe valve parts. We may provide other differend parts material composition according to the customer' s request or the actual valve working condition.

VBV-C150

API GLOBE VALVE

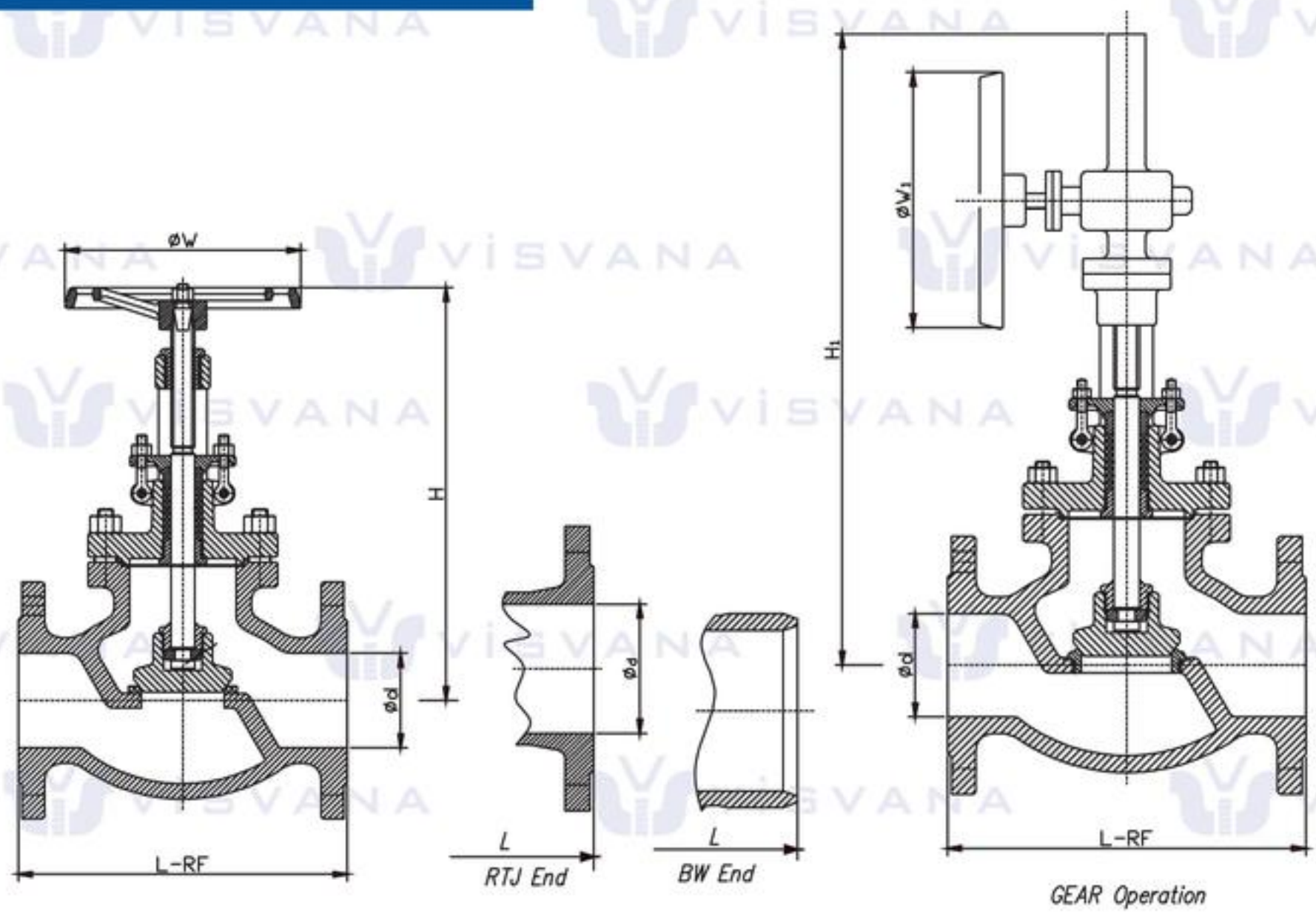

Class 150 & JIS 10K Gate Valve

Class	Size		Dimensions (mm)								Weight (Kg)	
	NPS	DN	L			d	H	H1	W	W1	H.W	G.O
			RF	RTJ	BW							
150	1/2	15	108	119	108	13	185		100		4	
	3/4	20	117	130	117	19	190		100		4.5	
	1	25	127	140	127	25	211		100		5.5	
	1 1/4	32	140	152	140	32	220		135		8.5	
	1 1/2	40	165	178	165	38	240		135		12	
	2	50	203	216	203	51	328		200		18	
	2 1/2	65	216	229	216	64	360		250		26	
	3	80	241	254	241	76	373		280		43	
	4	100	292	305	292	102	400		300		54	
	5	125	356	369	356	127	435		350		71	
	6	150	406	419	406	152	528	556	350	310	95	114
	8	200	495	508	495	203	680	658	400	310	160	158
	10	250	622	635	622	254	775	805	450	460	299	259
	12	300	698	711	698	305	880	955	500	460	373	378
	14"	350	787	800	787	337		1100		460		640
	16"	400	914	927	914	387		1175		460		920
	20"	500	978	991	978	488		1450		600		1650
	24"	600	1295	1308	1295	590		1690		600		2200

Noted: We may provide other different actuators according to the customer's request, such as pneumatich, electric, hydraulic actuators, the details of them according to the actual valve working condition.

VBV-C300

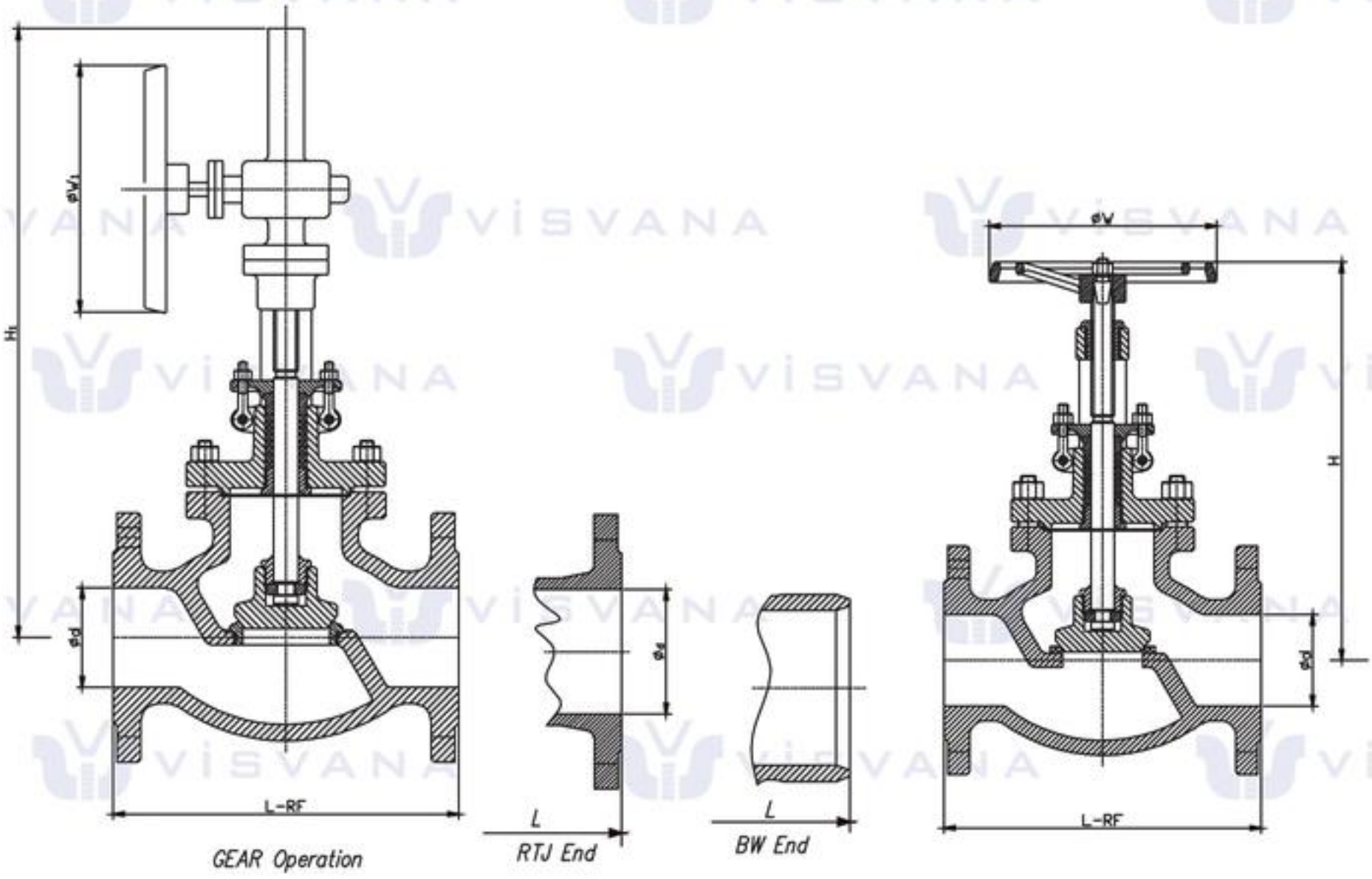

Class 300 & JIS 20K Cast Steel Globe Valve

Class	Size		Dimensions (mm)								Weight (Kg)	
	NPS	DN	L			d	H	H1	W	W1	H.W	G.O
			RF	RTJ	BW							
300	1/2	15	152	164	152	13	184		120		5	
	3/4	20	178	191	178	19	226		160		6.5	
	1	25	203	216	203	25	233		160		9	
	1 1/4	32	216	229	216	32	253		160		12	
	1 1/2	40	229	241	229	38	273		160		16	
	2	50	267	283	267	51	346		200		29	
	2 1/2	65	292	308	292	64	390		250		44	
	3	80	318	333	318	76	403		280		59	
	4	100	356	371	356	102	474		350		87	
	5	125	400	416	400	127	540		350		181	
	6	150	444	460	444	152	635	690	450	310	162	177
	8	200	559	575	559	203	870	950	550	460	281	389
	10	250	622	638	622	254	950	990	600	460	355	409
	12	300	711	727	711	305	1030	1155	700	460	575	635
	14	350	838			336		1155		600		880
	16	400	864			387		1325		600		1300
	18	450	977			431		1473		720		1600
	20	500	1016			482		1574		720		2100

Noted: We may provide other different actuators according to the customer's request, such as pneumatic, electric, hydraulic actuaotors, the details of them acoording to the actual valve working condition.

VBV-C600 / VBV-C900 VBV-C1500

API GLOBE VALVE

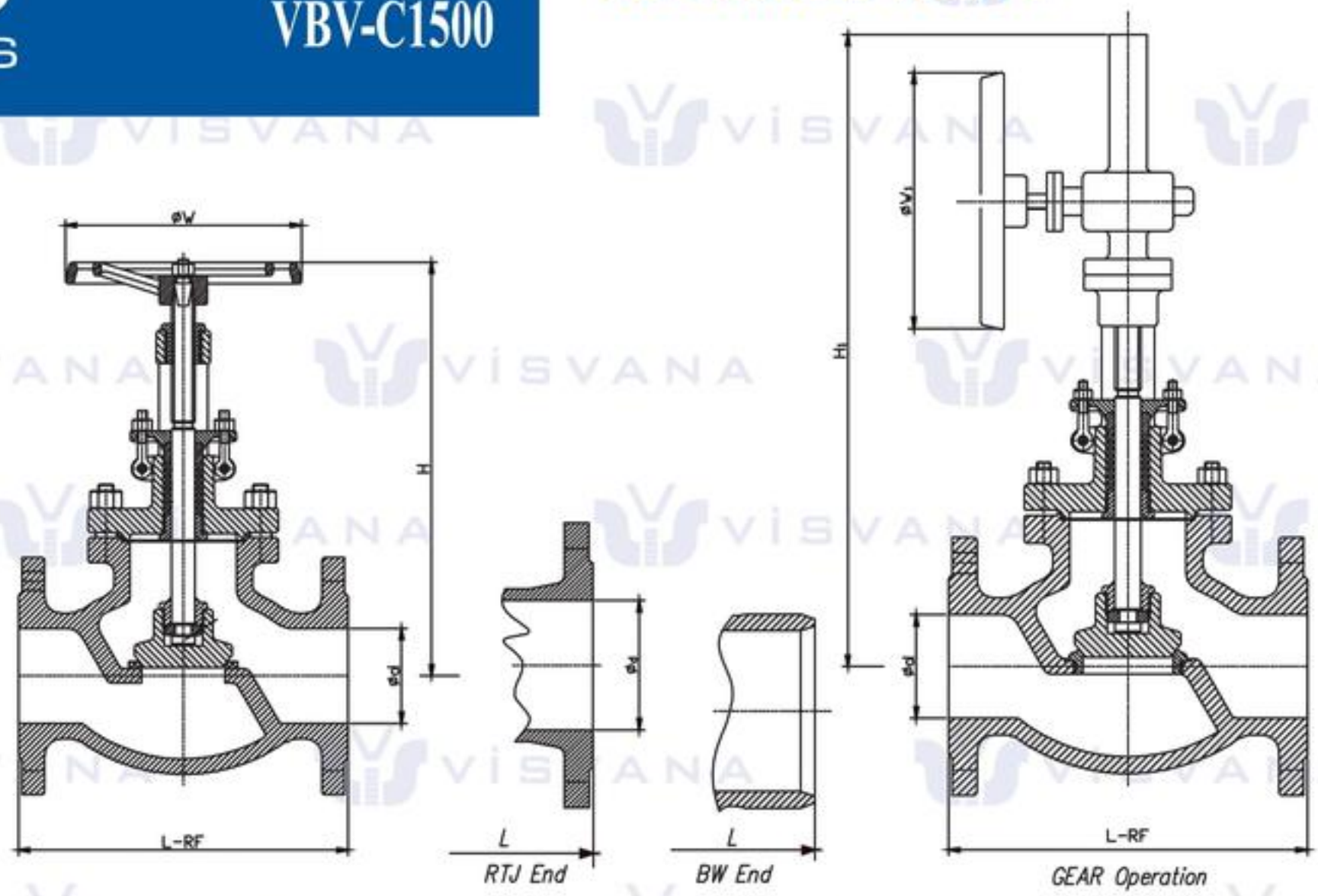

Class 600 & Class 1500 Globe Valve

Class	Size		Dimensions (mm)								Weight (Kg)	
	NPS	DN	L			d	H	H1	W	W1	H.W	G.O
			RF	RTJ	BW							
600	2	50	292	295	292	51	360		250		35	
	2 1/2	65	330	333	330	64	410		280		42	
	3	80	356	359	356	76	465		280		66	
	4	100	432	435	432	102	545	575	400	310	117	148
	5	125	508	511	508	127	625	660	500	310	243	208
	6	150	559	562	559	152	785	975	550	460	263	334
	8	200	660	664	660	200	930	1120	650	460	469	544
	10	250	787	791	787	248		1219		600		875
	12	300	838	841	838	298		1570		600		1280
900	2	50	368	371	368	48	480		350		55	
	2 1/2	65	419	422	419	57	520		350		68	
	3	80	381	384	381	73	564	630	400	310	113	128
	4	100	457	460	457	98	685	720	450	310	179	210
	5	125	559	562	559	127	780	840	550	460	270	325
	6	150	610	613	610	146	950	1015	650	460	429	480
	8	200	737	740	737	190	1050		700		815	
1500	2	50	368	371	368	48	505		350		137	
	2 1/2	65	419	422	419	57	550		400		141	
	3	80	470	473	470	70	630	765	450	310	261	320
	4	100	546	549	546	92	808	890	460	310	336	397
	6	150	705	711	705	137	930	1020	610	530	966	1035
	8	200	832	841	832	178	1140	1230	610	530	1210	1280

Noted: We may provide other different actuators according to the customer's request, such as pneumatic, electric, hydraulic actuaotors, the details of them acoording to the actual valve working condition.

API FORGED STEEL GLOBE VALVE

VDBS-800 / VDBS-900
VDBS-1500 / VDBS-2500

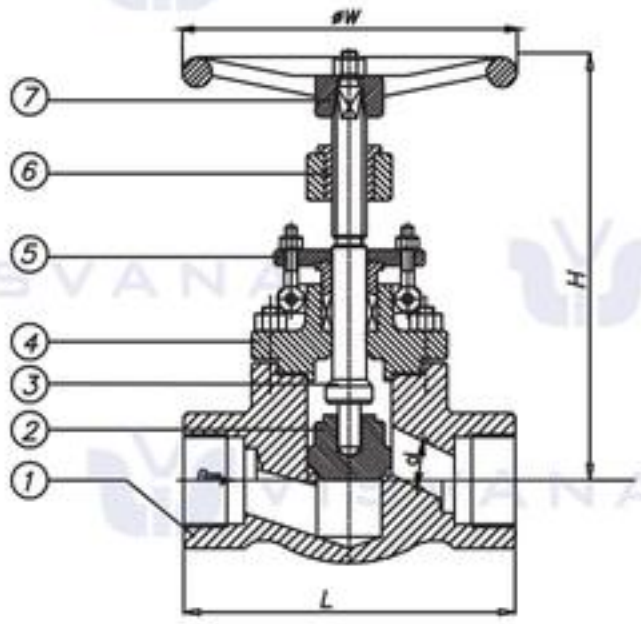

Welded Bonnet
Socket–welding End

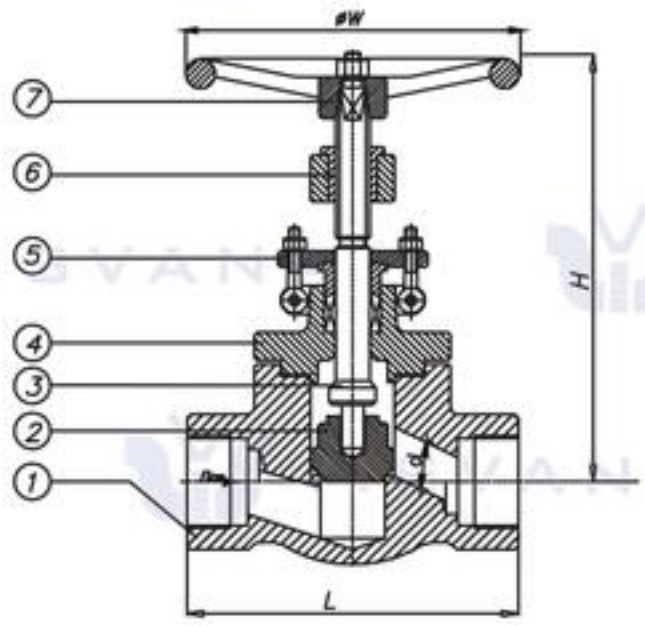

Bolted Bonnet
Socket–welding End

Standards

Design and Manufacture	API 602
Inspection and Test	API598
Socket-weld dimension	ASME B16.11
End threads dimension	ASME B1.20.1
Pressure-temperature ratings	ASME B16.34

Part Name			Material	
1	Body	ASTM A105	ASTM A182F304	ASTM A182F316
2	Disc	ASTM A105	ASTM A182F304	ASTM A182F316
3	Stem	ASTM A182F6	ASTM A182F304	ASTM A182F316
4	Bonnet	ASTM A105	ASTM A182F304	ASTM A182F316
5	Gland Flange	ASTM A105	ASTM A182F304	ASTM A182F316
6	Stem Nut	ASTM A276410		
7	Handwheel	ASTM A197		

Class 150 & Class 1500 Forged Globe Valve

Class	Size		Dimensions (mm)				NPT	Weight (Kg)
	NPS	DN	L	d	H	W		
150 - 800	1/2"	15	79	10	158	100	1/2"	2.0
	3/4"	20	92	13	158	100	3/4"	2.2
	1"	25	111	17.5	192	125	1"	2.5
	1 1/4"	32	120	23	227	160	1 1/4"	5.5
	1 1/2"	40	152	28.5	240	160	1 1/2"	7.0
	2"	50	172	35	279	180	2"	11.5
900 - 1500	1/2"	15	92	10	187	125	1/2"	3.5
	3/4"	20	111	13	187	125	3/4"	4.0
	1"	25	120	17.5	227	160	1"	6.3
	1 1/4"	32	152	23	242	160	1 1/4"	8.0
	1 1/2"	40	172	28.5	278	180	1 1/2"	12.5
	2"	50	220	35	325	200	2"	19.5
2500	1/2"	15	150	11	293	160	1/2"	10.8
	3/4"	20	150	11	293	160	3/4"	12.0
	1"	25	170	14	344	200	1"	13.5
	1 1/4"	32	200	16	383	250	1 1/4"	18.5
	1 1/2"	40	200	25	383	250	1 1/2"	22.0
	2"	50	250	28	442	300	2"	37.0

THE FEATURES OF GLOBE VALVE

Bolted bonnet: outside screw and yoke: rising stem: metallic seating surfaces.

BODY AND BONNET CONNECTION

The body and bonnet of class 150~class900 globe valves are usually with studs and nuts. And the body and bonnet of class 1500~class2500 globe valve are usuallyt of pressure seal desing.

GASKET OF COVER FLANGE

Stainless steel+flexible graphite wounded gasket is used for class 150 and class 300 globe valve. Stainless steel+flexible graphite wounded gasket is used for class600,and ring joint gasket is also optional for class600.ring joint gasket is used for class900 globe valve. Pressure seal desing is used for class 1500~class2500 globe valve.

ACTUATION

Hand Wheel, impact hand Wheel%gear box is usually used for globe valve actuation. Chain Wheel and electirc actuator can be also used for globe valve actuation if being requested by the customers.

SEAT

For carbon steel globe valve, the seat is usually forged steel. The sealing surface of the seat is spray welded, whit hard alloy specified by the customer. The seat have two type: welded on seat and integral seal, for stainless globe valve, integral seat is usually adopted, or to weld hard alloy directly integrally. If the customer have any other request about the seat, please kindly advise before placing the order.

API SWING CHECK VALVE

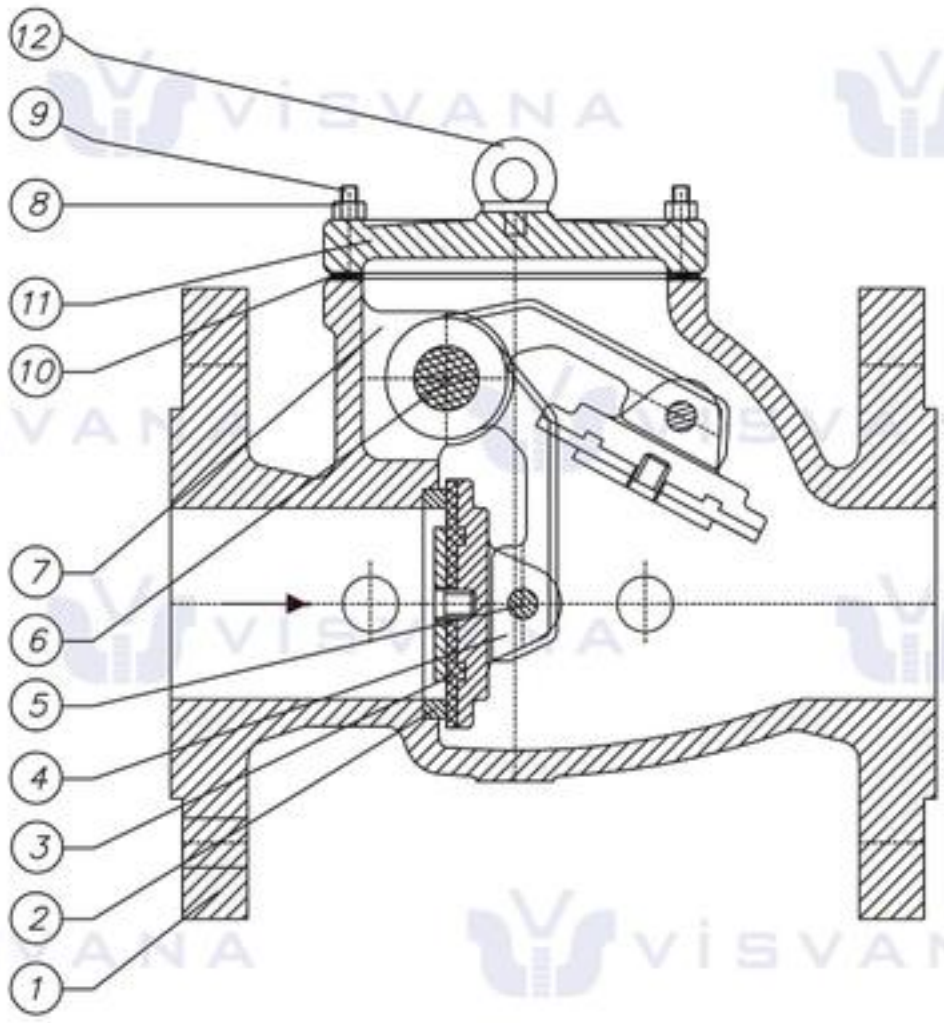

STANDARD MATERIAL To API 600

Trim Code	Seat Ring Surface Part No.2	Disc Surface Part No.3	Hing pin Part No.6	
1	F6	F6	F6	
2	F304	F304	F304	
5	Stellite	Stellite	F6	
8	Stellite	F6	F6	
9	Monel	Monel	Monel	
10	F316	F316	F316	
13	Alloy 20	Alloy 20	Alloy 2	

Standards

Design and Manufacture	BS 1868-1873,ASME B16.34,API6D
Inspection and Test	API598,API6D
End Falnge dimension	ASME B16.5
End Falnge dimension	ASME B16.47A MSS SP-44
End Falnge dimension	ASME B16.47B API605
BW end dimension	ASME B16.25
Face to face	ASME B16.10
Pressure-temperature ratings	ASME B16.34
Wall thickness dimension	API600 and BS 1868

Standard Material Specifications

Parts name		Carbon steel to ASTM		Alloy Steel to ASTM				Stainless Steel to ASTM			
1	Body	A216WCB	A352 LCB	A217 WC1	A217 WC6	A217 WC9	A217 C5	A351 CF8	A351 CF8M	A351 CF3	A351 CF3M
11	Cover	A216 WCB	A352 LCB	A217 WC1	A217 WC6	A217 WC9	A217 C5	A351 CF8	A351 CF8M	A351 CF3	A351 CF3M
3	Disc	A216 WCB	A352 LCB	A217 WC1	A217 WC6	A217 WC9	A217 C5	A351 CF8	A351 CF8M	A351 CF3	A351 CF3M
4	Hinge	A216 WCB	A352 LCB	A217 WC1	A217 WC6	A217 WC9	A217 C5	A351 CF8	A351 CF8M	A351 CF3	A351 CF3M
9	Bolt	A193 B7	A320 L7	A193 B7	A193 B16	A193 B16	A193 B16	A193 B8	A193 B8	A193 B8	A193 B8
8	Nut	A194 2H	A194 4	A194 2H	A194 4	A194 4	A194 4	A194 8	A194 8	A194 8	A194 8
5	Disc Nut	A194 2H	410	410	410	410	410	304	316	304L	316L
10	Gasket	SS Spiral Wound W/graphite, or SS Spiral Wound W/PTFE, of Reinforced PTFE									
12	Eye Bolt	Steel									
7	Yoke	A216 WCB	A352 LCB	A217 WC1	A217 WC6	A217 WC9	A217 C5	A351 CF8	A351 CF8M	A351 CF3	A351 CF3M

Noted: The chart above only lists out some common composition of steel globe valve parts. We may provide other differend parts material composition according to the customer' s request or the actual valve working condition.

VCS-C150
VCS-C300

API SWING CHECK VALVE

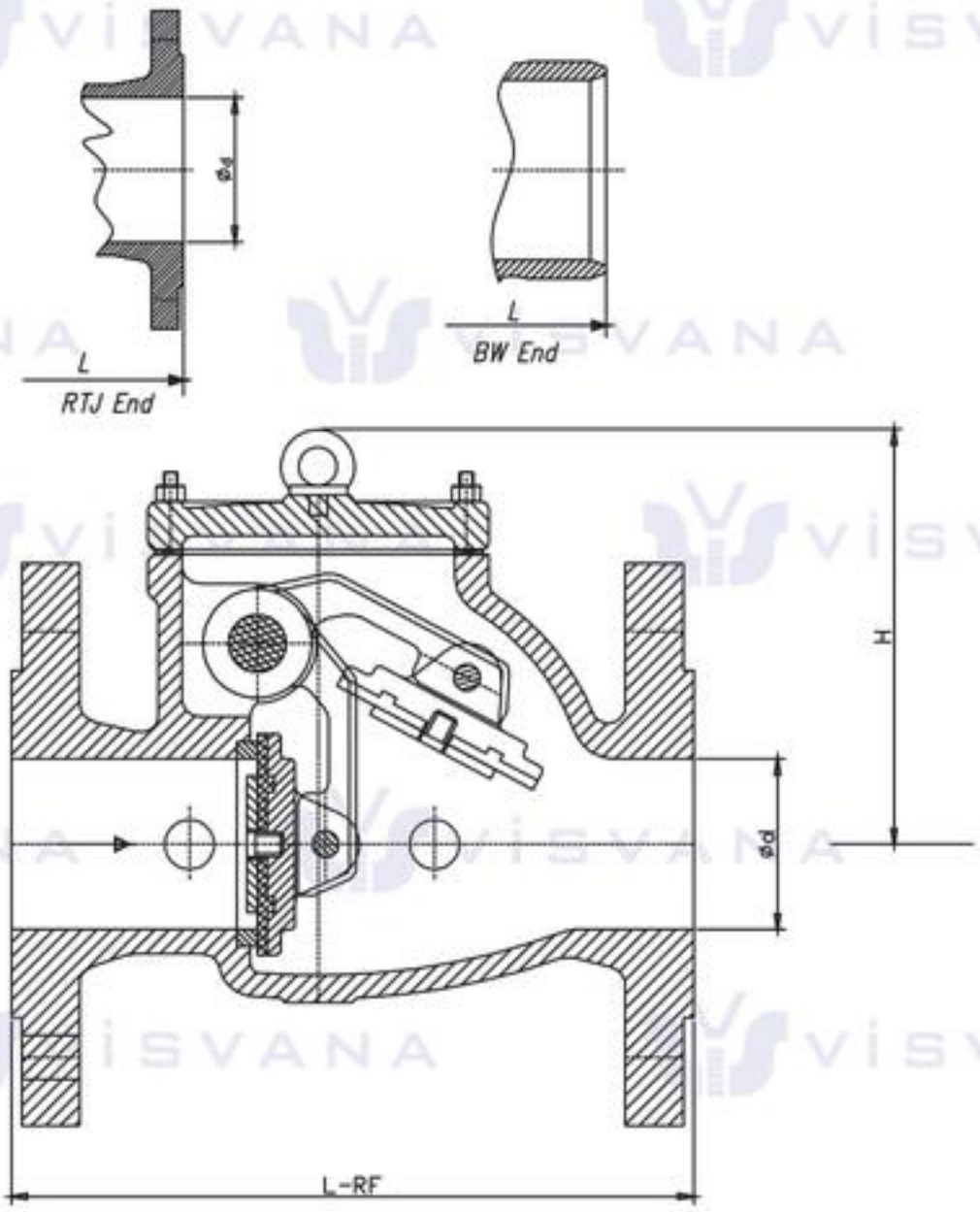

Class 150 & Class 300 Swing Check Valve

Size		Class 150 Dimensions (mm)						Class 300 Dimensions (mm)					
NPS	DN	L			d	H	Weight (Kg)	L			d	H	Weight (Kg)
		RF	RTJ	BW				RF	RTJ	BW			
2	50	203	216	203	51	138	14	267	283	267	51	150	22
2 1/2	65	216	229	216	64	160	19	292	308	292	64	178	35
3	80	241	254	241	76	172	24	318	333	318	76	223	44
4	100	292	305	292	102	245	43	356	371	356	102	255	57
5	125	330	343	330	127	260	59	400	416	400	127	280	80
6	150	356	368	356	152	280	72	445	460	445	152	310	120
8	200	495	508	495	203	347	124	533	549	533	203	355	194
10	250	622	635	622	254	390	196	622	638	622	254	145	290
12	300	699	711	699	305	435	330	711	727	711	305	185	450
14	350	787	800	787	337	465	417	838	854	838	337	515	587
16	400	864	876	864	387	525	503	864	879	864	387	560	761
18	450	978	991	978	438	580	630	978	994	978	432	620	1030
20	500	978	991	978	489	615	791	1016	1035	1016	483	685	1191
24	600	1295	1308	1295	591	710	960	1346	1368	1346	584	760	1892
26	650	1295		1295	633	840	1250	1346	1372	1346	633	850	2300
28	700	1448		1448	684	920	1580	1499	1524	1499	684	920	2600
30	750	1524		1524	735	980	1950	1594	1619	1594	735	1150	3200
32	800	1727		1727	779	1016	2800	1727		1727	779	1260	3700
36	900	1956		1956	874	1092	3200	2083		2083	874	1390	4300

API SWING CHECK VALVE

VCS-C600 / VCS-C900
VCS-C1500 / VCS-C2500

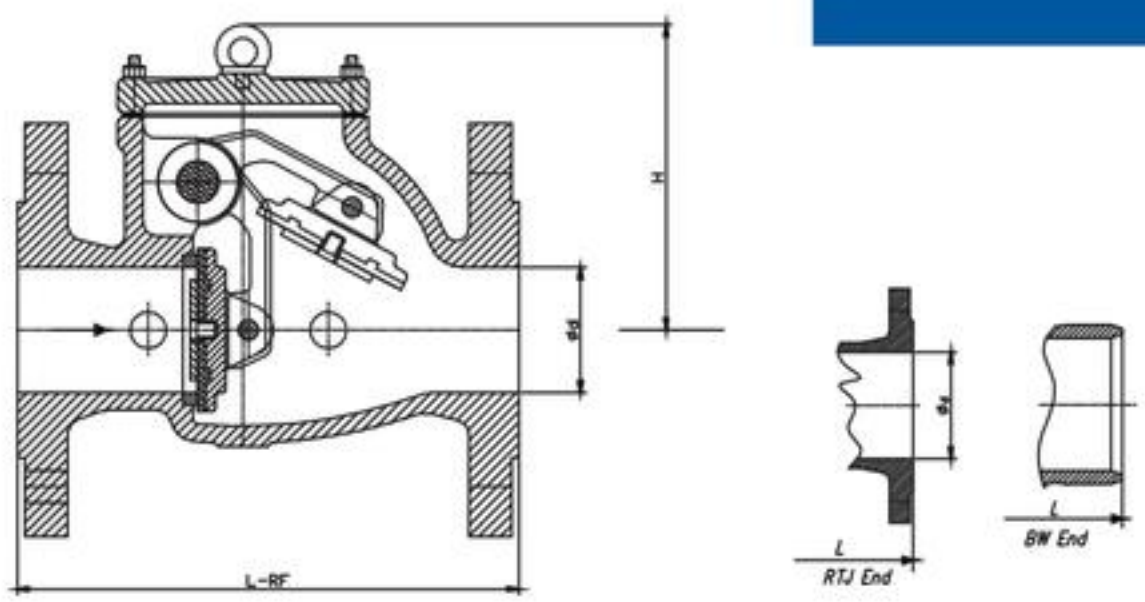

Class 600 & Class 2500 Swing Check Valve

Size		Class 600 Dimensions (mm)						Class 900 Dimensions (mm)					
NPS	DN	L			d	H	Weight (kg)	L			d	H	Weight (kg)
		RF	RTJ	BW				RF	RTJ	BW			
2	50	292	295	292	51	170	26	368	371	368	51	183	72
2 1/2	65	330	333	330	64	178	35	419	422	419	64	220	75
3	80	356	359	356	76	225	59	381	384	381	73	280	102
4	100	432	435	432	102	275	99	457	460	457	98	315	134
5	125	508	511	508	127	320	155	559	562	559	127	360	200
6	150	559	562	559	152	385	208	610	613	610	146	390	354
8	200	660	664	660	200	445	357	737	740	737	190	460	514
10	250	787	791	787	248	500	561	838	841	838	238	540	754
12	300	838	841	838	298	570	752	965	968	965	283	640	818
14	350	889	892	889	327	590	889	1029	1038	1029	311	680	1180
16	400	991	994	991	375	650	1285	1130	1140	1130	356	780	1909
18	450	1092	1095	1092	419	778	1800	1219	1232	1219	400	845	2500
20	500	1194	1200	1194	464	970	2150	1321	1334	1321	444	1050	2960
24	600	1397	1407	1397	559	1100	3200	1549	1568	1549	533	1200	4600

Size		Class 1500 Dimensions (mm)						Class 2500 Dimensions (mm)					
NPS	DN	L			d	H	Weight (kg)	L			d	H	Weight (kg)
		RF	RTJ	BW				RF	RTJ	BW			
2	50	368	371	368	48	265	67	451	454	451	38	285	93
2 1/2	65	419	422	419	57	240	75	508	514	508	48	305	100
3	80	470	473	470	70	303	188	578	584	578	57	350	196
4	100	546	549	546	92	340	210	673	683	673	73	410	410
5	125	673	676	673	127	380	294	794	807	794	96	490	440
6	150	705	711	705	137	430	473	914	927	914	111	540	868
8	200	832	841	832	178	500	634	1022	1038	1022	146	620	970
10	250	991	1000	991	222	605	1140	1270	1292	1270	184	705	1700
12	300	1130	1146	1130	264	785	1939	1422	1445	1422	219	855	2080
14	350	1257	1276	1257	289	830	2000						
16	400	1384	1407	1384	330	950	2700						
18	450	1537	1559	1537	371	1080	3960						
20	500	1664	1686	1664	416	1145	4400						

API LIFTCHECK VALVE

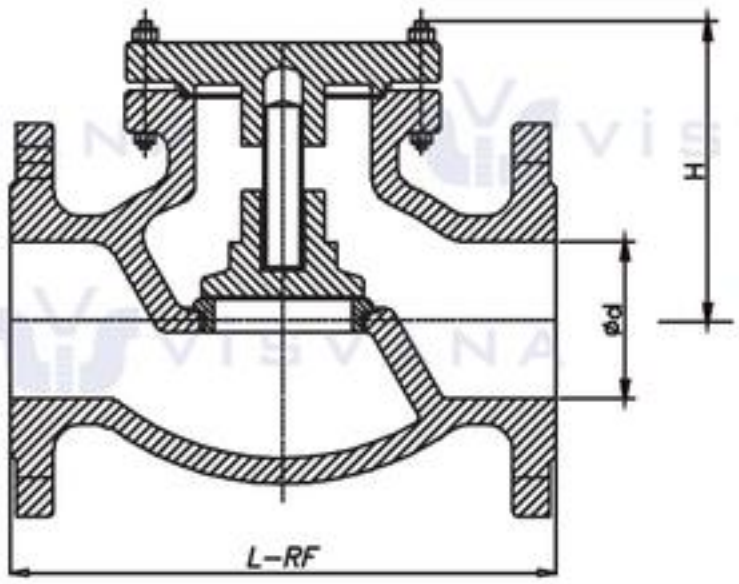

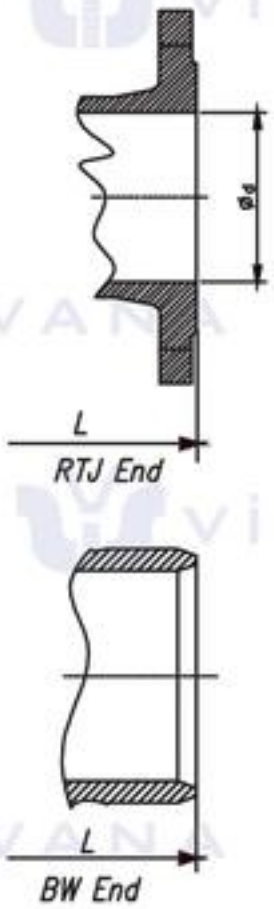

Class 150 & Class 900 Lift Check Valve

Size		Class 150 Dimensions (mm)						Class 300 Dimensions (mm)					
NPS	DN	L			d	H	Weight (kg)	L			d	H	Weight (kg)
		RF	RTJ	BW				RF	RTJ	BW			
1/2	15	108	119	108	13	76	3	152	162	152	13	78	5
3/4	20	117	130	117	19	76	4	178	191	178	19	82	6
1	25	127	140	127	25	98	5	203	216	203	25	102	8
1 1/4	32	140	153	140	32	102	7	216	229	216	32	106	11
1 1/2	40	165	178	165	38	115	8	229	242	229	38	118	13
2	50	203	216	203	51	140	15	267	283	267	51	140	26
2 1/2	65	216	229	216	64	162	22	292	308	292	64	164	33
3	80	241	254	241	76	168	28	318	333	318	76	178	50
4	100	292	305	292	102	194	42	356	371	356	102	195	86
5	125	356	368	356	127	210	60	400	416	400	127	223	120
6	150	406	419	406	152	226	75	445	460	445	152	245	180
8	200	495	508	495	203	250	118	533	549	533	203	280	220
10	250	622	635	622	254	275	194	622	638	622	254	336	310
12	300	699	711	699	305	332	320	711	727	711	305	380	510

Size		Class 600 Dimensions (mm)						Class 900 Dimensions (mm)					
NPS	DN	L			d	H	Weight (kg)	L			d	H	Weight (kg)
		RF	RTJ	BW				RF	RTJ	BW			
2	50	292	295	292	51	152	32	368	371	368	48	180	50
2 1/2	65	330	333	330	64	167	45	419	422	419	57	200	65
3	80	356	359	356	76	178	68	381	384	381	73	235	88
4	100	432	435	432	102	215	98	457	460	457	98	270	140
5	125	508	511	508	125	240	155	559	562	559	125	300	210
6	150	559	562	559	152	279	230	610	613	610	146	350	300
8	200	660	664	660	200	328	300	737	740	737	190	400	390

API FORGED STEEL CHECK VALVE

VDCS-C800 / VDCS-C900
VDCS-C1500 / VDCS-C2500

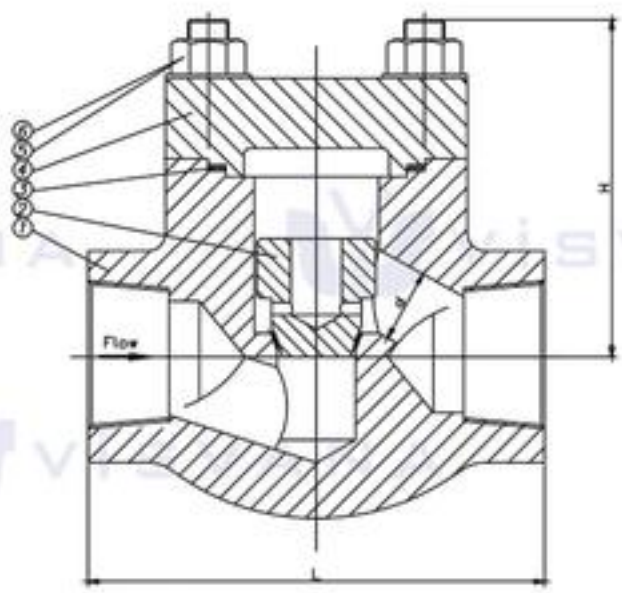

Lift Check Valve

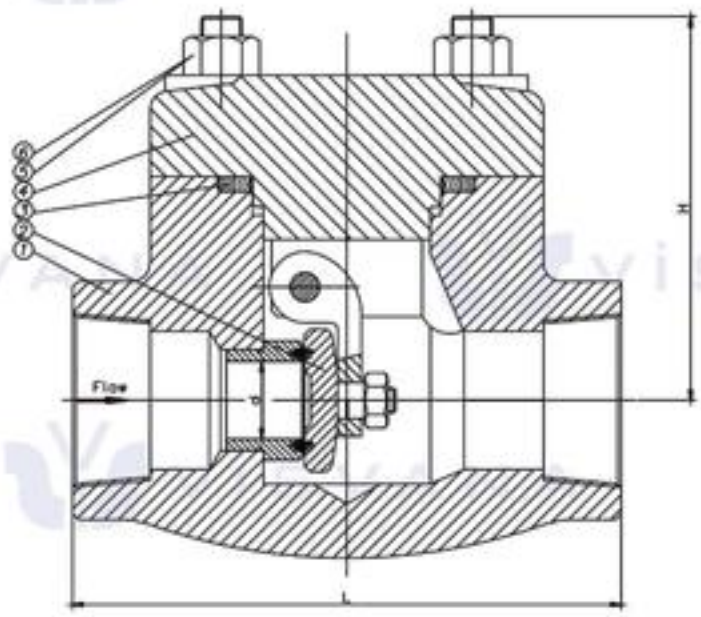

Swing Check Valve

PARTS AND MATERIAL LIST

Part Name	Material			
1	Body	ASTM A105	ASTM A182 F304	ASTM A182 F316
2	Disc	ASTM A105	ASTM A182 F304	ASTM A182 F316
3	Gasket	Graphite+SS304	Graphite+SS316	Graphite+SS316
4	Bonnet	ASTM A105	ASTM A182 F304	ASTM A182 F316
5	Bolt	A193 B7	A193 B8	A193 B8
6	Nut	A194 2H	A194 8	A194 8

Standards

Design and Manufacture	API 602.
Inspection and Test	API 598.
Socket-weld dimension	ASME B16.11.
End Threads dimension	ASME B1.20.1.
Pressure-temperature ratings	ASME B16.34.

Class	Size		Piston Check Valve					Swing Check Valve				
	NPS	DN	Dimensions (mm)			NPT	Weight (kg)	Dimensions (mm)			NPT	Weight (kg)
			L	d	H			L	d	H		
150-800	1/2"	15	79	10	54.5	1/2"	1.4	79	13	54.5	1/2"	1.3
	3/4"	20	92	13	54.5	3/4"	1.9	92	13	54.5	3/4"	1.7
	1"	25	111	17.5	72	1"	2.6	111	18	72	1"	2.4
	1 1/4"	32	120	23	81	1 1/4"	4.2	120	24	81	1 1/4"	4.0
	1 1/2"	40	152	28.5	94	1 1/2"	5.3	120	29	94	1 1/2"	5.1
	2"	50	172	35	112	2"	9.0	140	36.8	112	2"	8.8
900-1500	1/2"	15	92	10	73	1/2"	2.4	92	13	73	1/2"	2.2
	3/4"	20	111	13	73	3/4"	2.9	111	13	73	3/4"	2.7
	1"	25	120	17.5	84	1"	4.6	120	18	84	1"	4.4
	1 1/4"	32	152	23	97	1 1/4"	6.5	120	24	97	1 1/4"	6.3
	1 1/2"	40	172	28.5	115	1 1/2"	10.5	140	29	115	1 1/2"	10.3
	2"	50	220	35	132	2"	15.5	160	36.8	132	2"	15.3
2500	1/2"	15	150	11	102	1/2"	7.8					
	3/4"	20	150	14	102	3/4"	8.5					
	1"	25	170	19	107	1"	12.0					
	1 1/4"	32	200	25	128	1 1/4"	18.2					
	1 1/2"	40	200	28	128	1 1/2"	19.5					
	2"	50	250	35	143	2"	27.0					

VWDC-C150
VWDC-C300

API WAFER TYPE CHECK VALVE

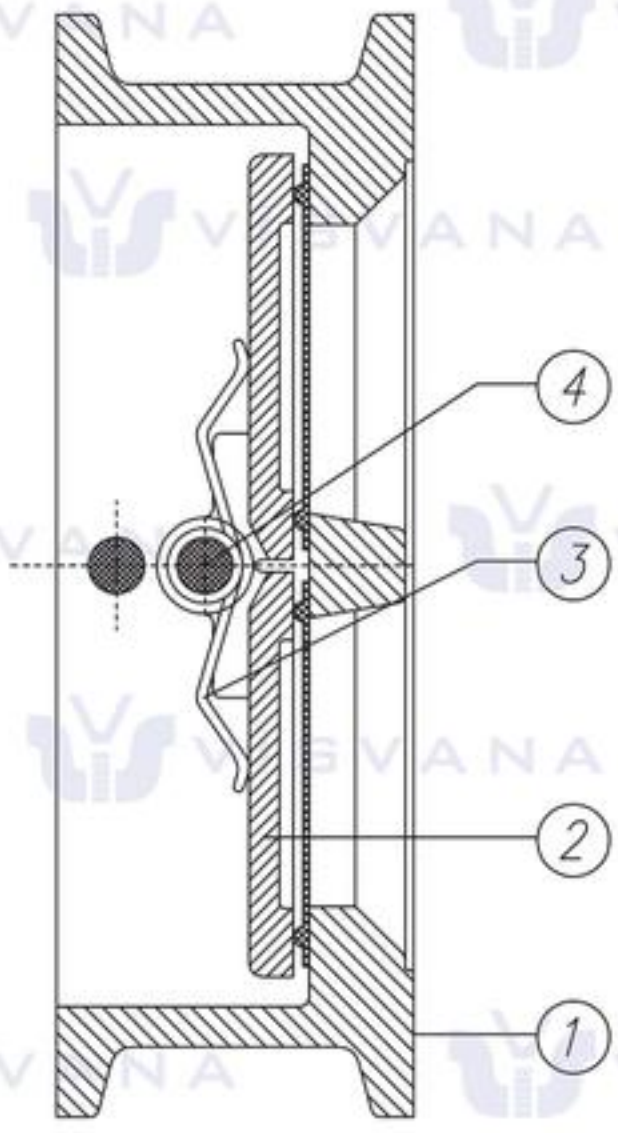

Dual Plate
Check Valve

STANDARDS

1. Desing and manufacture: API 6D
2. Face to face: API 6D; DIN 3202;
3. Pressure-temperature ratings: ASME B 16.34
4. Inspection and test: API 598, API 6D
5. End flange dimension: ASME B16.5, ASME B16.47, API605, MSS SP-44, ISO7005-1, DIN2543-2548

STRUCTURE FEATURES

1. It is short in face to face dimensions, being 1/4-1/8 times that of traditional flange type check valve
2. It is impact in volume size and light in weight of about 1/4-1/20 times that of traditional flange type check valve.
3. The disc closes quickly with less water hammer pressure.
4. It is convenient in installation, being available for use on level or vertical pipelines.
5. Flow passage is fluent with less flow resistance.
6. It acts sensitively with good sealing effect.
7. Disc travel is short with less impact force caused by valve closing.
8. It is impact in integral structure with nice outline view.
9. It is longer for services life with high reliability.

Materials for main parts

Part Name		Material							
1	Body	A216 WCB	A352 LCB	A217 WC6	A217 WC9	A217 C5	A217 C5	A351 CF8	A351 CF8M
2	Disc	A351 CF8	A351 CF8	A217 WC6	A217 WC9	A217 C5	A217 C5	A351 CF8	A351 CF8M
3	Stem	A182 F6a	A182 F304	A182 F304	A182 F304	A182 F304	A182 F304	A182 F304	A182 F316
4	Spring	Stainles steel/inconel							

Noted: the chart above only lists out some common composition of steel ball valve parts, we may provide other different parts material composition according to the customer's request or the actual valve working condition.

API WAFER TYPE CHECK VALVE

VWDC-C150
VWDC-C300

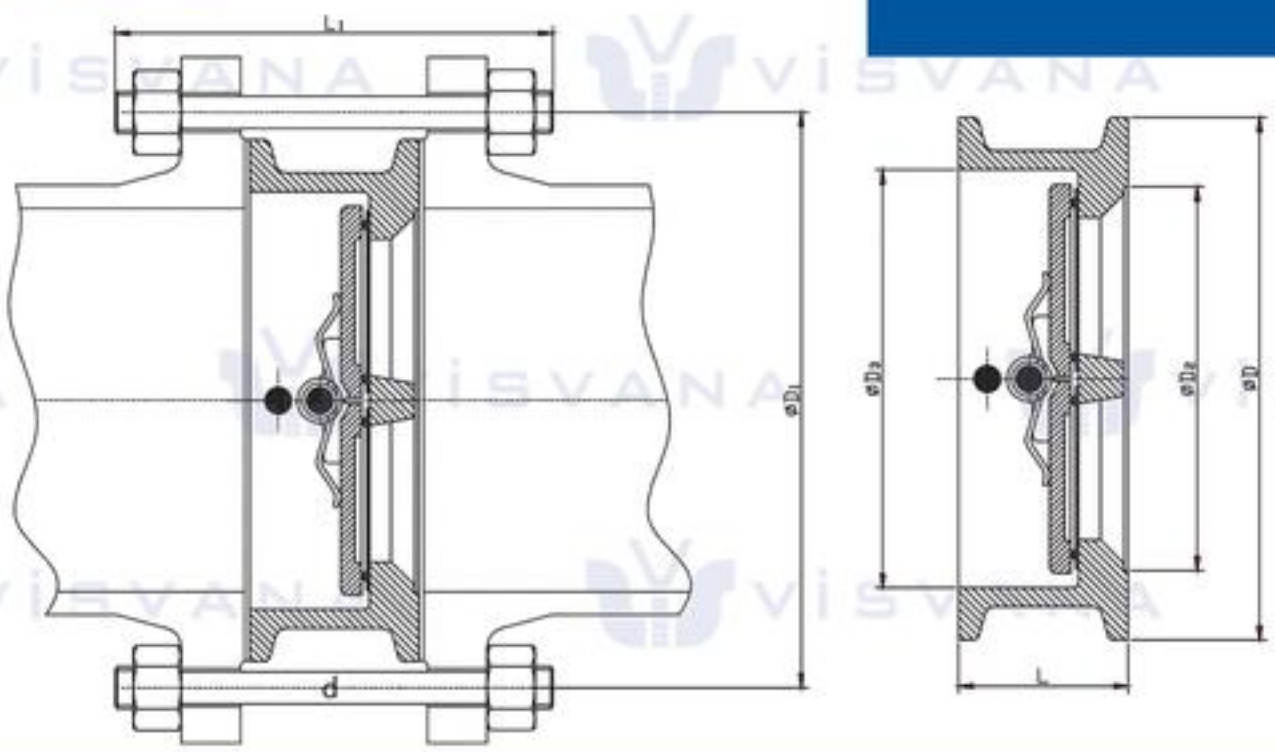

Class	Size		Dimensions (mm)				Weight (kg)	Pipeline Flanges					
	NPS	DN	L	D	D_2	D_3		D_1	Number of bolts	d		L_1	
										In	mm	RF	RTJ
150	2	50	60	103	51	56	2	120,5	4	5/8	M16	140	155
	2 1/2	65	67	122	65	73	3	139,5	4	5/8	M16	150	165
	3	80	73	135	80	88	4	152,5	4	5/8	M16	160	175
	4	100	73	173	102	108	6	190,5	8	5/8	M16	170	185
	5	125	86	195	127	132	8	216.0	8	3/4	M20	190	205
	6	150	98	220	152	160	13	241,5	8	3/4	M20	205	220
	8	200	127	277	203	210	25	298,5	8	3/4	M20	240	255
	10	250	146	337	254	266	39	362.0	12	7/8	M24	270	285
	12	300	181	407	305	310	54	432.0	12	7/8	M24	310	325
	14	350	184	448	350	355	80	476.0	12	1	M27	325	340
	16	400	191	512	400	405	117	540.0	16	1	M27	340	355
	18	450	203	547	450	455	138	578.0	16	1 1/8	M30	365	380
	20	500	219	604	500	505	163	635.0	20	1 1/8	M30	385	400
	24	600	222	715	600	605	331	749,5	20	1 1/4	M33	405	420
	28	700	305	773	700	700	380	795,5	40	3/4	M20	455	
	30	750	305	824	746	750	425	846.0	44	3/4	M20	455	
	32	800	305	878	796	800	560	900.0	48	3/4	M20	460	
	36	900	368	983	898	910	640	1009,5	44	7/8	M24	540	
	42	1050	432	1142	1050	1055	960	1171,5	48	1	M27	625	
	48	1200	524	1302	1200	1205	1400	1335.0	44	1 1/8	M30	740	
300	2	50	60	110	51	58	3	127.0	8	5/8	M16	155	175
	2 1/2	65	67	128	65	73	4	149.0	8	3/4	M20	175	195
	3	80	73	147	80	88	6	168,5	8	3/4	M20	190	210
	4	100	73	179	102	108	8	200.0	8	3/4	M20	195	215
	5	125	86	214	127	132	15	235.0	8	3/4	M20	215	235
	6	150	98	249	152	160	18	270.0	12	3/4	M20	230	250
	8	200	127	305	203	210	31	330.0	12	7/8	M24	280	300
	10	250	146	359	254	266	51	387,5	16	1	M27	315	335
	12	300	181	420	305	310	77	451.0	16	1 1/8	M30	365	385
	14	350	222	483	350	355	117	514,5	20	1 1/8	M30	410	430
	16	400	232	537	400	405	190	571,5	20	1 1/4	M33	435	455
	18	450	264	594	450	455	200	628,5	24	1 1/4	M33	475	495
	20	500	292	652	500	505	265	686.0	24	1 1/4	M33	510	535
	24	600	318	772	600	608	410	813.0	24	1 1/2	M39	560	585
	30	750	368	882	735	740	660	921.0	36	1 3/8	M36	650	
	36	900	483	1044	873	880	1020	1089.0	32	1 5/8	M42	800	
	42	1050	568	1196	1035	1045	1540	1244,5	36	1 3/4	M45	920	
	48	1200	629	1365	1179	1190	2260	1416.0	40	1 7/8	M48	1010	

VYPT-C150 VYPT-C300 VYPT-C600

API Y PATTERN STRAINER

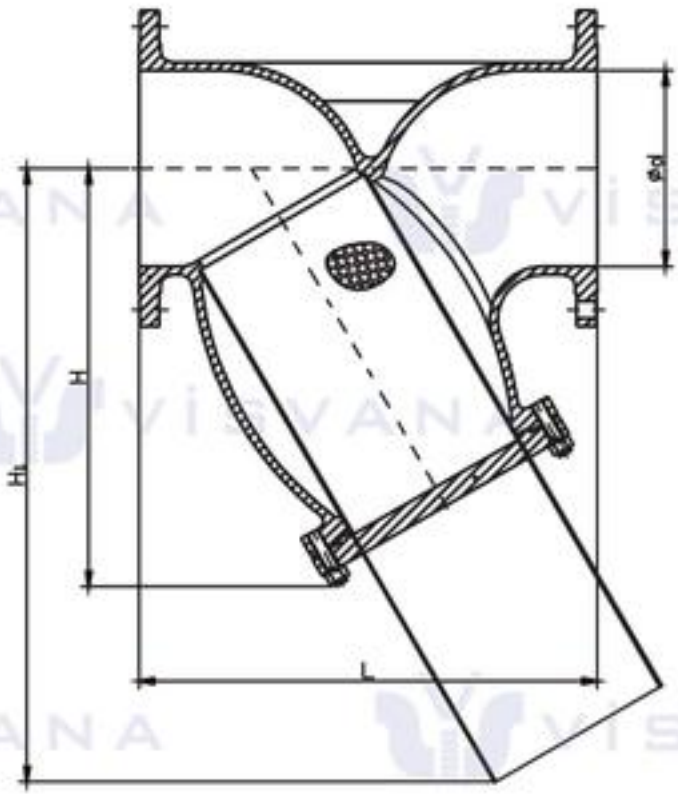

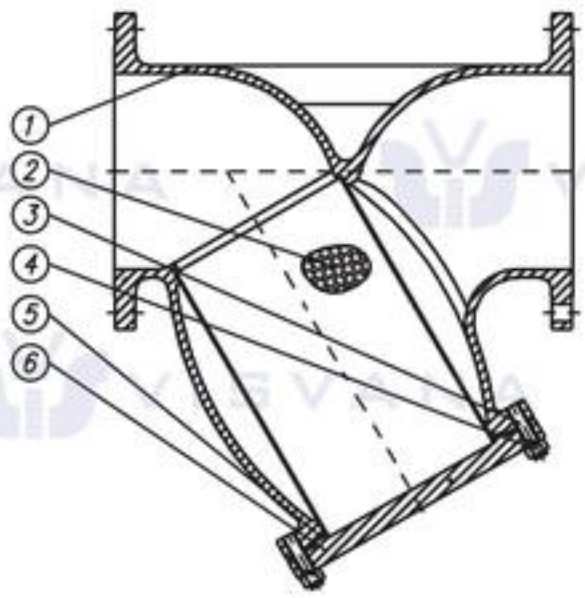

PARTS AND MATERIAL LIST

Part Name	Material			
1	Body	ASTM A216 WCB	ASTM A351 CF8	ASTM A351 CF8M
2	Screen	ASTM 182 F304	ASTM 182 F304	ASTM 182 F316
3	Bonnet Bolt	ASTM 193 B7	ASTM 193 B8	ASTM 193 B8
4	Bonnet Nut	ASTM 194 2H	ASTM 194 8	ASTM 194 8
5	Gasket	Graphite+SS304	Graphite+SS304	Graphite+SS316
6	Bonnet	ASTM A216 WCB	ASTM A351 CF8	ASTM A351 CF8M

Class 150 & Class 300 & Class 600 /JIS 10K - JIS 20K Y Strainer

Size		Class 150				Class 300				Class 600			
NPS	DN	Dimensions (mm)			Wt(kg)	Dimensions (mm)			Wt(kg)	Dimensions (mm)			Wt(kg)
		L	H	H1	W.H	L	H	H1	W.H	L	H	H1	W.H
1/2	15	108	67	92	2	152	70	95	3				
3/4	20	117	73	105	2	178	80	110	4				
1	25	127	87	117	3	203	115	135	5				
1 1/4	32	140	100	138	4	216	105	142	7				
1 1/2	40	165	120	155	5	229	128	155	9				
2	50	203	145	185	13	267	152	184	16	292	210	350	19
2 1/2	65	216	170	220	15	292	185	236	20	330			
3	80	241	190	250	18	318	204	266	24	356	260	430	40
4	100	292	245	340	22	356	265	335	30	432			
5	125	356	290	400	42	400	280	386	50	508	310	510	51
6	150	406	325	450	50	444	335	460	70	559	385	520	161
8	200	495	370	500	91	559	420	595	115	660	455	620	243
10	250	622	455	635	205	622	500	710	270	787	505	635	463
12	300	699	525	735	297	711	575	781	380	838	660	780	765
14	350	787	610	885	394	838	650	938	520	889	720	990	998
16	400	914	800	1160	570	914	740	1055	608	991	840	1120	1230
18	450	978	965	1365	680								
20	500	978	1100	1550	830								

API BUTTERFLY VALVE

VHPBF-C150
VHPBF-C300

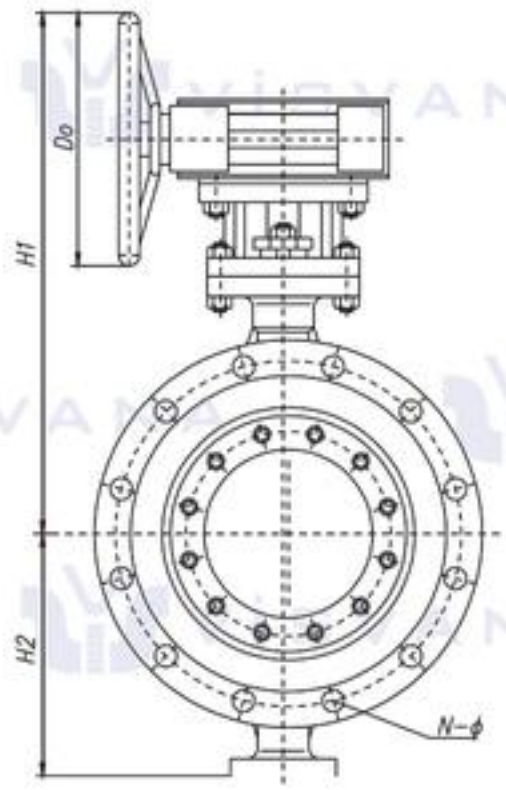

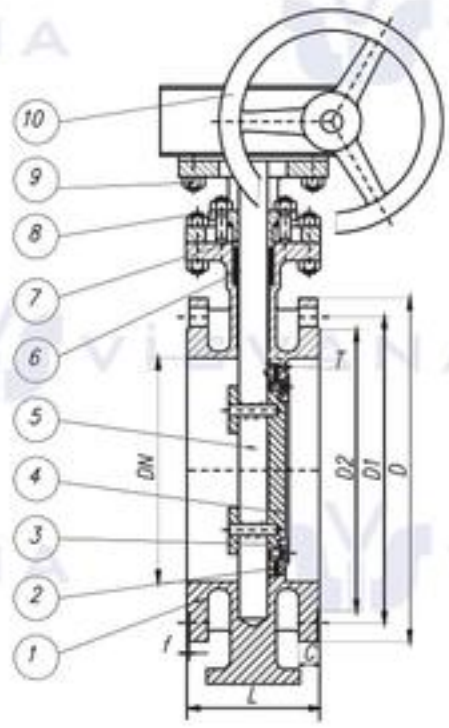

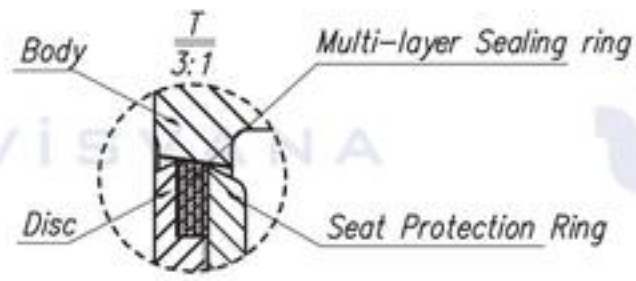

Class 150 & Class 300 Triple Offset Flange Butterfly Valve

Class	Size		Dimensions (mm)				Weight (kg)
	NPS	DN	L	H_1	H_2	D	
150	2	50	108	305	115	160	21
	2 1/2	65	112	315	125	160	24
	3	80	114	330	135	160	27
	4	100	127	360	140	160	28
	5	125	140	450	170	280	30
	6	150	140	475	175	280	50
	8	200	152	525	240	280	75
	10	250	165	570	270	280	105
	12	300	178	630	315	320	155
	14	350	190	675	345	350	190
	16	400	216	720	395	350	230
	18	450	222	805	405	350	300
	20	500	229	895	430	400	380
	24	600	267	950	500	400	490
	26	650	267	960	515	400	580
	28	700	292	1030	520	400	660
	30	750	308	1080	545	450	740
	32	800	318	1135	620	450	820
	36	900	330	1175	620	450	1100
	40	1000	410	1270	720	500	1430
	44	1100	450	1335	768	500	2200
300	2	50	150	315	115	500	32
	2 1/2	65	170	325	125	160	39
	3	80	180	340	135	160	42
	4	100	190	435	140	160	45
	5	125	200	475	170	280	48
	6	150	210	510	220	280	80
	8	200	230	520	240	280	120
	10	250	250	625	270	280	168
	12	300	270	670	320	350	248
	14	350	290	765	370	350	304
	16	400	310	840	410	350	368
	18	450	330	910	420	400	480
	20	500	350	980	460	400	608
	24	600	390	1080	540	400	784
	26	650	390	1130	585	450	928
	28	700	430	1175	640	450	1056
	30	750	430	1265	700	500	1184
	32	800	470	1300	765	500	1312
	36	900	510	1380	820	500	1760
	40	1000	550	1460	890	500	2288

Noted: We may provide other different actuators according to the customer's request, such as pneumatic, electric, hydraulic actuaotors, the details of them acoording to the actual valve working condition.

VHPBL-C150
VHPBL-C300

API TRIPLE OFFSET LUG BUTTERFLY VALVE

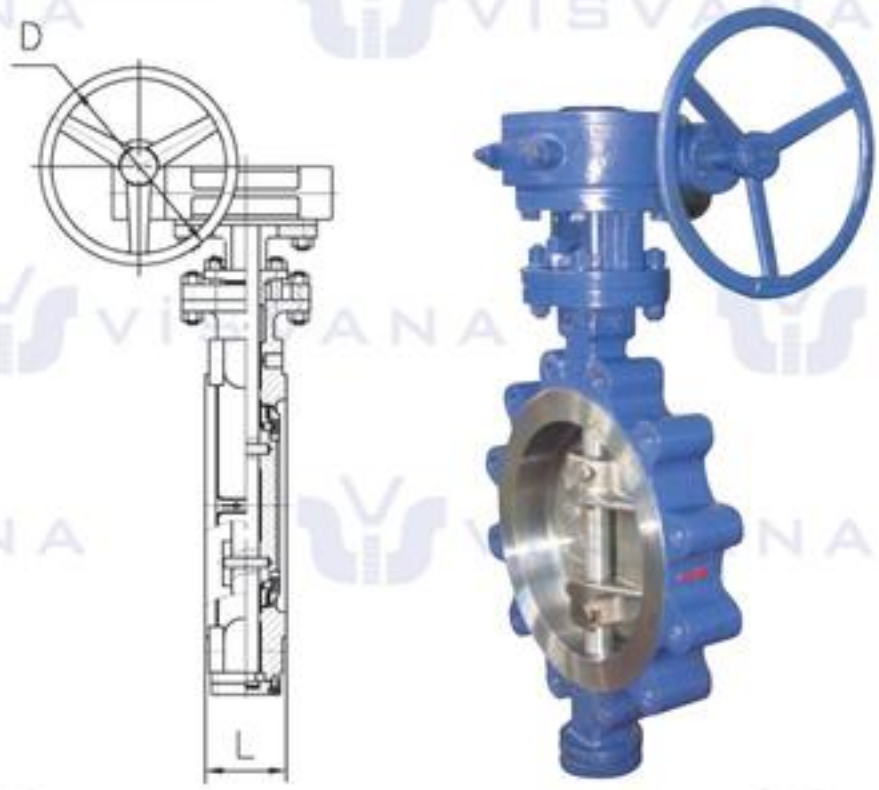

Class	Size		Dimensions (mm)				Weight (kg)
	NPS	DN	L	H_1	H_2	D	
150	2	50	43	305	105	160	14
	2 1/2	65	46	315	115	160	15
	3	80	48	330	125	160	17
	4	100	54	360	150	160	20
	5	125	57	450	160	280	27
	6	150	57	475	185	280	31
	8	200	64	525	245	280	45
	10	250	71	540	275	280	86
	12	300	81	660	315	320	105
	14	350	92	470	330	350	135
	16	400	102	730	365	350	150
	18	450	114	810	390	350	218
	20	500	127	885	430	400	289
	24	600	154	940	470	400	407
	26	650	165	955	490	400	445
	28	700	165	1050	505	400	470
	30	750	190	1050	525	450	590
	32	800	190	1185	580	450	680
	36	900	203	1205	625	450	900
	40	1000	216	1260	685	500	1000
	48	1200	254	1395	790	500	1550
300	2	50	43	315	115	160	19
	2 1/2	65	46	325	125	160	22
	3	80	48	340	140	160	35
	4	100	54	440	150	280	30
	5	125	57	480	180	280	41
	6	150	59	515	220	280	47
	8	200	73	530	250	280	68
	10	250	83	640	300	350	130
	12	300	92	685	335	350	158
	14	350	117	780	375	350	216
	16	400	133	830	380	400	225
	18	450	149	915	420	400	327
	20	500	159	985	475	400	434
	24	600	181	1085	540	450	610
	26	650					
	28	700					
	30	750					
	32	800					
	36	900					

Noted: We may provide other different actuators according to the customer's request, such as pneumatic, electric, hydraulic actuaotors, the details of them acoording to the actual valve working condition.

API SLEEVE TYPE SOFT SEALING PLUG VALVE

VB2F-C150
VB2F-C300

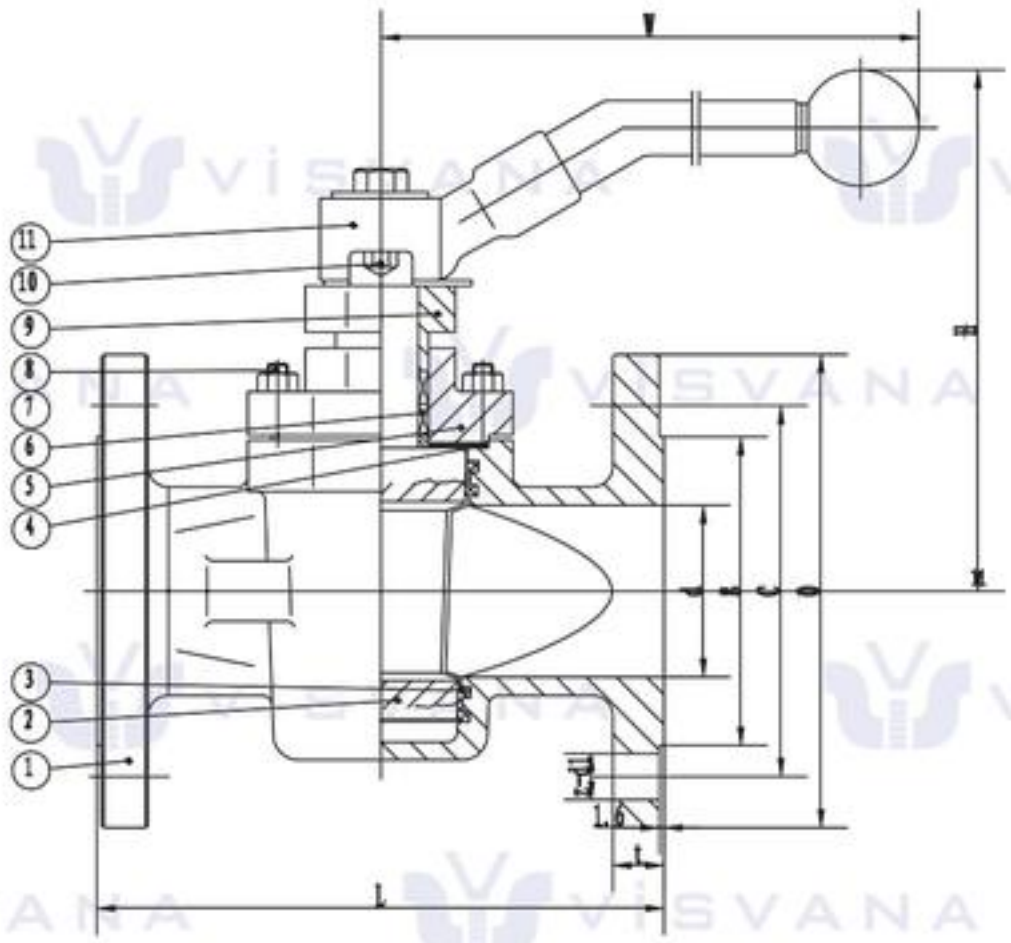

Standards

Design standard	API 599, API 6D
Face to face	ASME B16.10. API 6D
Butt welding end	ASME B16.25
End flange	ASME B16.5
Test and Inspection	API 598

Parts and material list

Parts name		Carbon steel to ASTM		Alloy Steel to ASTM				Stainless Steel to ASTM			
1	Body	A216 WCB	A352 LCB	A217 WCI	A217 WC6	A217 WC9	A217 C5	A351 CF8	A351 CF8M	A351 CF3	A351 CF3M
2	Sleeve	PTFE									
3	Plug	A182 F6a	A182 F6a	A182 F6a	A182 F6a	A182 F6a	A182 F6a	A182 F304	A182 F316	A182 F304L	A182 F316L
4	Cover	A216 WCB	A352 LCB	A217 WCI	A217 WC6	A217 WC9	A217 C5	A351 CF8	A351 CF8M	A351 CF3	A351 CF3M
5	Gasket	Flexible Graphite+SS, PTFE									
6	Adjusting gasket	A182 F6a	A182 F6a	A182 F6a	A182 F6a	A182 F6a	A182 F6a	A182 F304	A182 F316	A182 F304L	A182 F316L
7	Adjusting bolt	A193 B7	A320 L7	A193 B7	A193 B16	A193 B16	A193 B16	A193 B8	A193 B8	A193 B8	A193 B8
8	Bolt	A193 B7	A320 L7	A193 B7	A193 B16	A193 B16	A193 B16	A193 B8	A193 B8	A193 B8	A193 B8
9	Nut	A194 2H	A194 4	A194 2H	A194 4	A194 4	A194 4	A194 8	A194 8	A194 8	A194 8
10	Yoke	A216 WCB	A216 WCB	A216 WCB	A216 WCB	A216 WCB	A216 WCB	A216 WCB	A351 CF8	A351 CF8	A351 CF8
11	Worm	Cast iron or Carbon Steel									

VB2F-C150
VB2F-C300

API SLEEVE TYPE SOFT SEALING PLUG VALVE

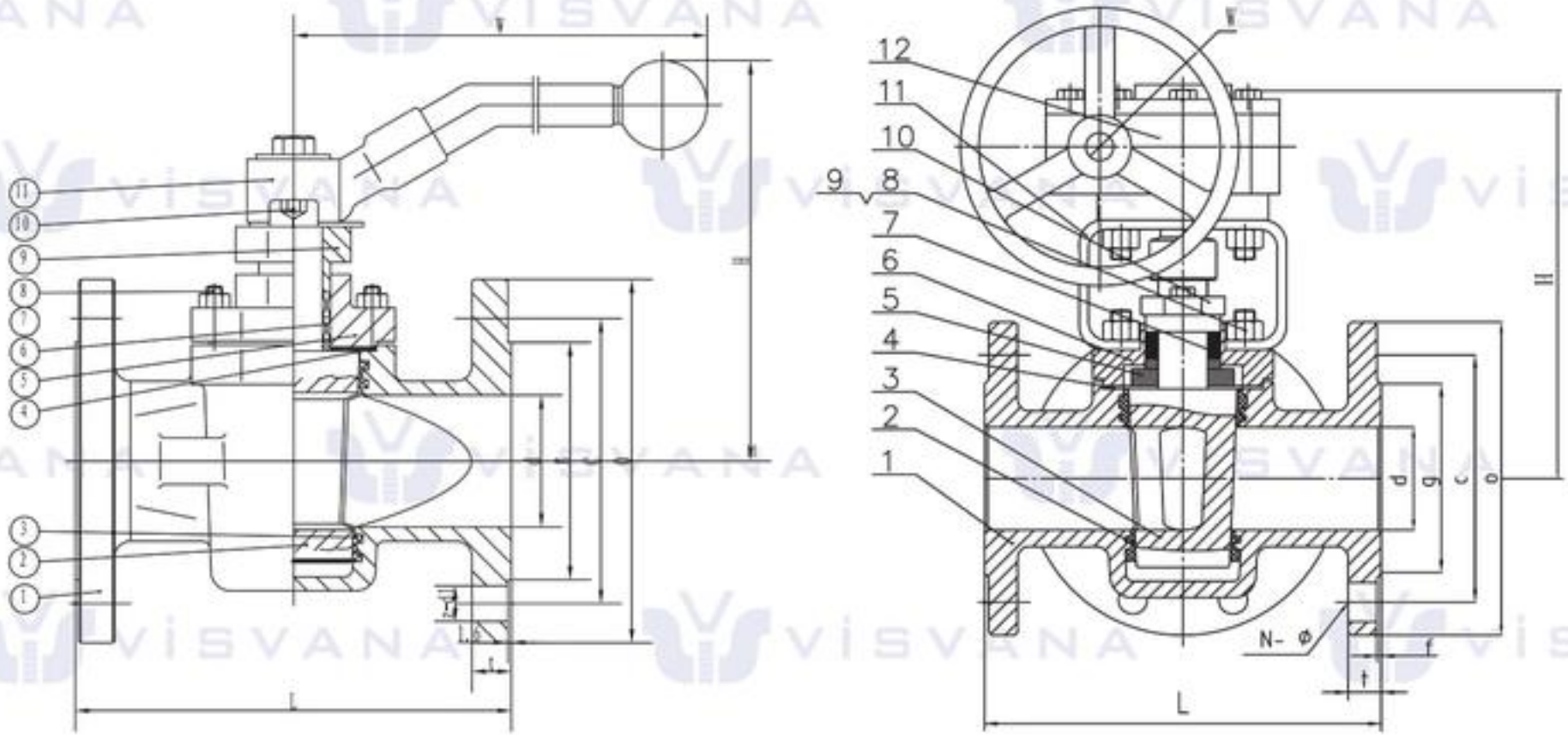

Class 150 & Class 300 Sleeve Soft Sealing Plug Valve

Size		Class 150					Class 300				
NPS	DN	Dimensions (mm)				Wt(kg) W.H	Dimensions (mm)				Wt(kg) W.H
		L	d	H	Do		L	d	H	Do	
1/2	15	108	13	110	175	8,5	140	13	110	175	9,5
3/4	20	117	19	115	175	9,5	152	19	115	175	10,5
1	25	127	25	115	175	10,5	165	25	115	175	12
1 1/4	32	140	32	135	220	12	178	32	135	220	14
1 1/2	40	165	38	140	280	14	190	38	140	280	16
2	50	178	49	150	305	18	216	49	150	305	20
2 1/2	65	190	62	165	350	22	241	62	165	350	24
3	80	203	74	180	405	26	283	74	180	405	29
4	100	229	100	380	300	40	305	100	380	300	53
5	125	254	127	460	300	60	381	127	460	300	75
6	150	267	150	520	320	70	403	150	520	320	85
8	200	292	201	580	320	130	419	201	580	320	185
10	250	330	252	620	350	219	457	252	620	350	230
12	300	356	303	680	380	381	502	303	680	380	390
14	350	381	334	760	450	570	762	334	760	450	550

API LUBRICATED PLUG VALVE

VB2FL-C150
VB2FL-C300

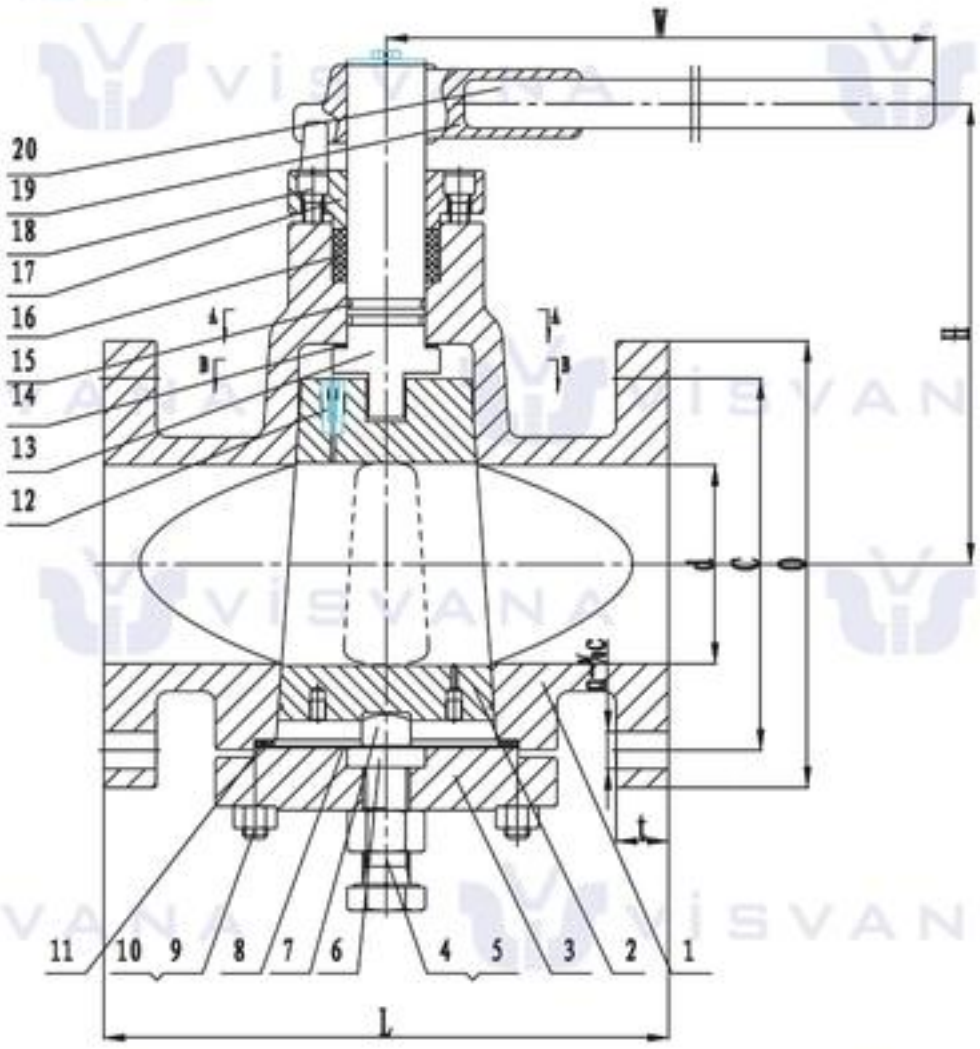

Standards

Design standard	API 599, API 6D
Face to face	ASME B16.10. API 6D
Butt welding end	ASME B16.25
End flange	ASME B16.5
Test and Inspection	API 598

Specifications

Construction type : Pressure Balance;
Inverted Plug Valve
Opertior type : Handwheel, Gear Operation

Parts and material list

Parts name		Carbon steel to ASTM		Alloy Steel to ASTM				Stainless Steel to ASTM			
1	Bolt	A193 B7	A320 L7	A193 B7	A193 B16	A193 B16	A193 B16	A193 B8	A193 B8	A193 B8	A193 B8
2	Nut	A194 2H	A194 4	A194 2H	A194 4	A194 4	A194 4	A194 8	A194 8	A194 8	A194 8
3	Cover	A216 WCB	A352 LCB	A217 WCI	A217 WC6	A217 WC9	A217 C5	A351 CF8	A351 CF8M	A351 CF3	A351 CF3M
4	Gasket	Flexible Graphite+SS, PTFE									
5	Plug	A182 F6a	A182 F6a	A182 F6a	A182 F6a	A182 F6a	A182 F6a	A182 F304	A182 F316	A182 F304L	A182 F316L
6	Body	A216 WCB	A352 LCB	A217 WCI	A217 WC6	A217 WC9	A217 C5	A351 CF8	A351 CF8M	A351 CF3	A351 CF3M
7	Check Valve	SS	SS	SS	SS	SS	SS	SS	SS	SS	SS
8	Stem	A182 F6a	A182 F6a	A182 F6a	A182 F6a	A182 F6a	A182 F6a	A182 F304	A182 F316	A182 F304L	A182 F316L
9	O-ring	NBR or Viton									
10	Packing	Flexible Graphite+SS, PTFE									
11	Gland	A216 WCB	A352 LCB	A217 WCI	A217 WC6	A217 WC9	A217 C5	A351 CF8	A351 CF8M	A351 CF3	A351 CF3M
12	Nozzle	SS	SS	SS	SS	SS	SS	SS	SS	SS	SS
13	Wrench	Ductile Iron or Carbon Steel									

VB2FL-C150
VB2FL-C300

API LUBRICATEDPLUG VALVE

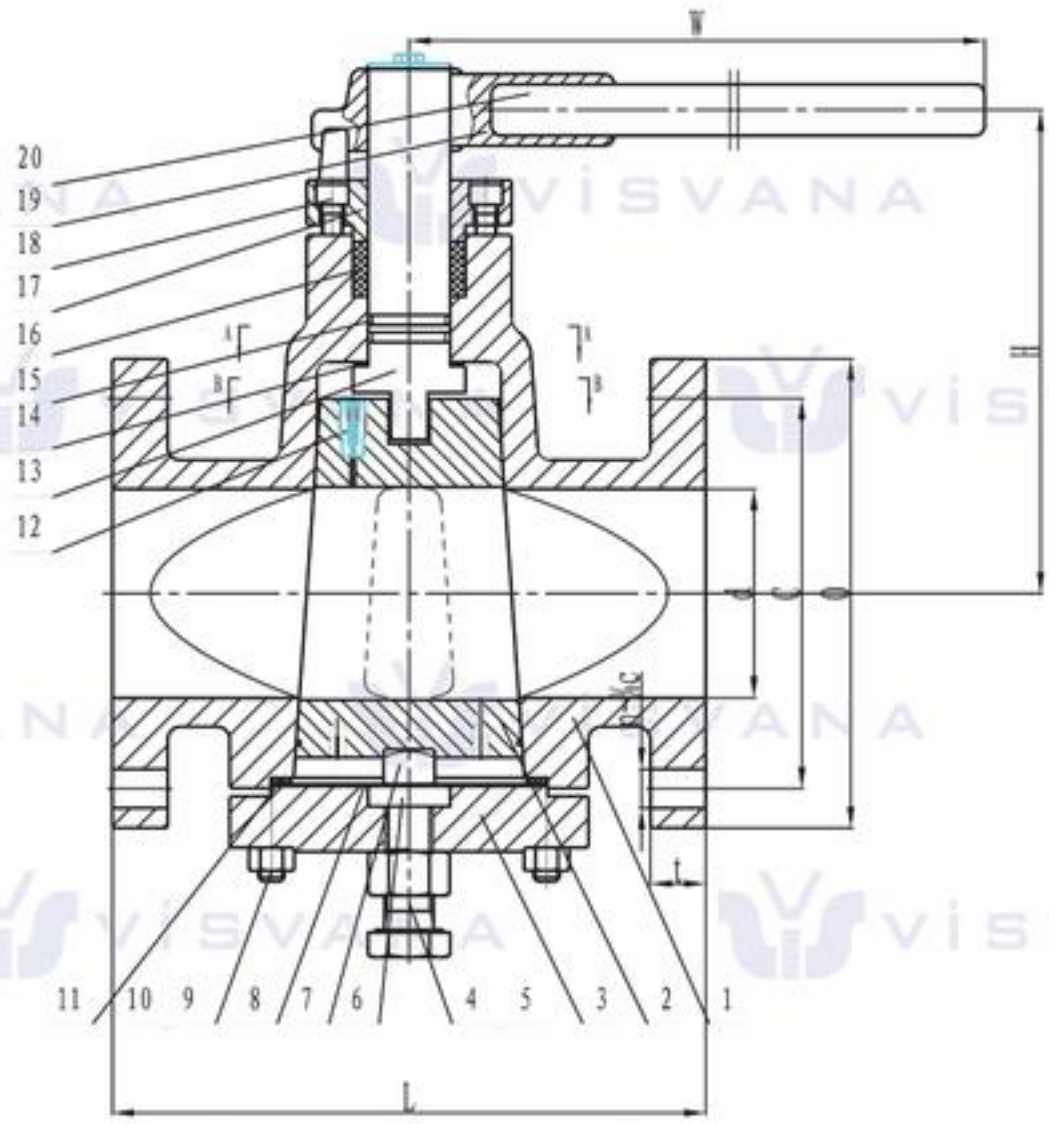

Class 150 & Class 300 Inverted Pressure Blance Lubricated Plug Valve

Size		Class 150					Class 300				
NPS	DN	Dimensions (mm)				Wt(kg) W.H	Dimensions (mm)				Wt(kg) W.H
		L	d	H	W		L	d	H	W	
1/2	15	108	13	180	400	10	140	13	180	400	12
3/4	20	117	19	180	400	12	152	19	180	400	14
1	25	127	25	185	500	14	165	25	185	500	16
1 1/4	32	140	32	200	500	17	178	32	200	600	19
1 1/2	40	165	38	214	600	19	190	38	210	600	21
2	50	178	49	215	600	21	216	49	215	820	24
2 1/2	65	190	62	250	820	29	241	62	250	1000	31
3	80	203	74	270	820	33	283	74	270	1000	36
4	100	229	100	300	300	48	305	100	300	300	61
5	125	254	127	340	300	75	381	127	340	300	86
6	150	267	150	365	320	98	403	150	365	320	130
8	200	292	201	400	320	125	419	201	400	320	190
10	250	330	252	450	350	171	457	252	450	350	255
12	300	356	303	510	380	230	502	303	510	380	380
14	350	381	334	590	380	370	762	334	590	380	560

API PIPE FLANGES

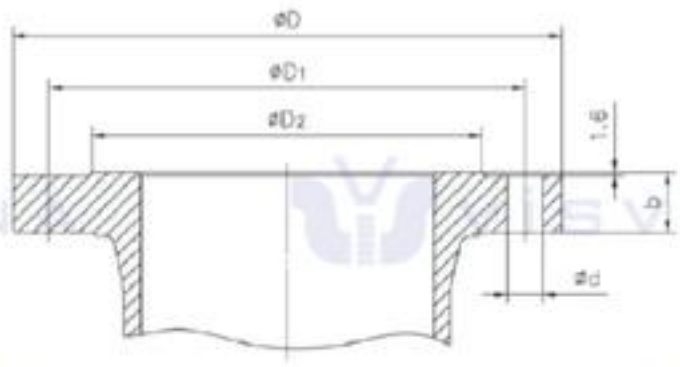

Class150 & Class300 Rf Flanges

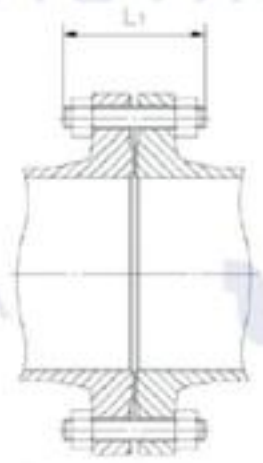

Length of Stud Bolt

Length of Machine Bolt

Steel Pipe Flanges ASME B16.5 RF

Class	Nominal Size		D		D1		D2		b		d		Bolt		L1		L2	
	NPS	DN	in	mm	in	mm	in	mm	in	mm	in	mm	Number	Diam	in	mm	in	mm
150 PN20	1/2	15	3.50	89	2.38	60.5	1.38	35	0.38	10	0.62	16	4	1/2	2.25	57	2.00	51
	3/4	20	3.88	98	2.75	69.9	1.69	43	0.41	10.5	0.62	15	4	1/2	2.50	64	2.00	51
	1	25	4.25	108	3.12	79.5	2.00	51	0.44	11.5	0.62	15	4	1/2	2.50	64	2.25	57
	1 1/4	32	4.62	117	3.50	88.9	2.50	64	0.50	13	0.62	16	4	1/2	2.75	70	2.25	64
	1 1/2	40	5.00	127	3.88	98.6	2.88	73	0.56	14.5	0.62	16	4	1/2	2.75	70	2.50	70
	2	50	6.00	152	4.75	120.7	3.62	92	0.62	16	0.75	19	4	5/8	3.25	83	2.75	76
	2 1/2	65	7.00	178	5.50	139.7	4.12	105	0.69	18	0.75	19	4	5/8	3.50	89	3.00	76
	3	80	7.50	190	6.00	152.4	5.00	127	0.75	19.5	0.75	19	4	5/8	3.50	89	3.00	76
	4	100	9.00	229	7.50	190.5	6.19	157	0.94	24	0.75	19	8	5/8	3.50	89	3.00	76
	5	125	10.00	254	8.50	215.9	7.31	186	0.94	24	0.88	22	8	3/4	3.75	95	3.25	83
	6	150	11.00	279	9.50	241.5	8.50	216	1.00	26	0.88	22	8	3/4	4.00	102	3.25	83
	8	200	13.50	343	11.75	298.5	10.62	270	1.12	29	0.88	22	8	3/4	4.25	108	3.50	89
	10	250	16.00	406	14.25	362.0	12.75	324	1.19	30.5	1.00	25	12	7/8	4.50	114	4.00	102
	12	300	19.00	483	17.00	431.8	15.00	381	1.25	32	1.00	25	12	7/8	4.75	121	4.00	102
	14	350	21.00	533	18.75	476.3	16.25	413	1.38	35	1.12	29	12	1	5.25	133	4.50	114
	16	400	23.50	597	21.25	540	18.50	470	1.44	37	1.12	29	16	1	5.25	133	4.50	114
	18	450	25.00	635	22.75	577.9	21.00	533	1.56	40	1.25	32	16	1 1/8	5.75	146	5.00	127
	20	500	27.50	699	25.00	635.0	23.00	584	1.69	43	1.25	32	20	1 1/8	6.25	159	5.50	140
	24	600	32.00	813	29.50	749.3	27.25	692	1.88	48	1.38	35	20	1 1/4	6.75	171	6.00	152
300 PN50	1/2	15	3.75	95	2.62	67.0	1.38	35	-	-	0.62	16	4	1/2	2.50	64	2.25	57
	3/4	20	4.62	117	3.25	83.0	1.69	43	-	-	0.75	19	4	5/8	3.00	76	2.50	64
	1	25	4.88	124	3.50	89.0	2.00	51	0.69	18	0.75	19	4	5/8	3.00	76	2.50	64
	1 1/4	32	5.25	133	3.88	99.0	2.50	64	0.75	19.5	0.75	19	4	5/8	3.25	83	2.75	70
	1 1/2	40	6.12	155	4.50	114.0	2.88	73	0.81	21	0.88	22	4	3/4	3.50	89	3.00	76
	2	50	6.50	165	5.00	127.0	3.62	92	0.88	22.5	0.75	19	8	5/8	3.50	89	3.00	76
	2 1/2	65	7.50	191	5.88	149.4	4.12	105	1.00	25.5	0.88	22	8	3/4	4.00	102	3.25	83
	3	80	8.25	210	6.62	168.1	5.00	127	1.12	29	0.88	22	8	3/4	4.25	108	3.50	89
	4	100	10.00	254	7.88	200.2	6.19	157	1.25	32	0.88	22	8	3/4	4.50	114	3.75	95
	5	125	11.00	279	9.25	235.0	7.31	186	1.38	35	0.88	22	8	3/4	4.75	121	4.25	108
	6	150	12.50	318	10.62	269.7	8.50	216	1.44	37	0.88	22	12	3/4	4.75	121	4.25	108
	8	200	15.00	381	13.00	330.2	10.62	270	1.62	41.5	1.00	25	12	7/8	5.50	140	4.75	121
	10	250	17.50	445	15.25	387.4	12.75	324	1.88	48	1.12	29	16	1	6.25	159	5.50	140
	12	300	20.50	521	17.75	450.9	15.00	381	2.00	51	1.25	32	16	1 1/8	6.75	171	5.75	146
	14	350	23.00	584	20.25	514.5	16.25	413	2.12	54	1.25	32	20	1 1/8	7.00	178	6.25	159
	16	400	25.50	648	22.50	571.5	18.50	470	2.25	57.5	1.38	35	20	1 1/4	7.50	191	6.50	165
	18	450	28.00	711	24.75	628.7	21.00	533	2.38	60.5	1.38	35	24	1 1/4	7.75	197	6.75	171
	20	500	30.50	775	27.00	685.8	23.00	584	2.50	63.5	1.38	35	24	1 1/4	8.00	203	7.25	184
	24	600	36.00	914	32.00	812.8	27.25	692	2.75	70	1.62	41	24	1 1/2	9.00	229	8.00	203

API PIPE FLANGES

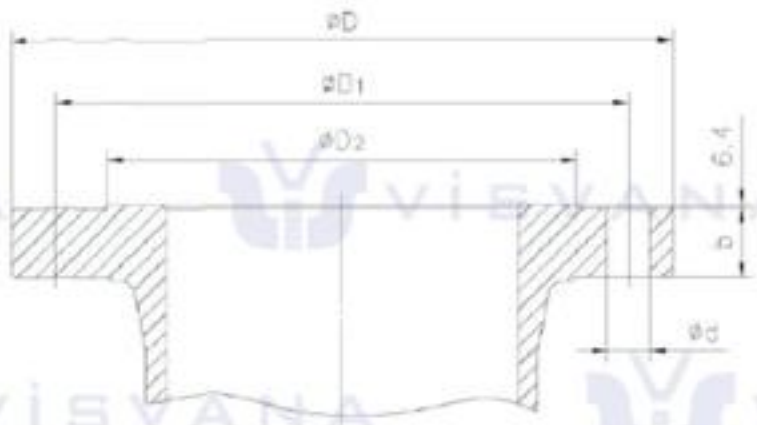

Class 600 - Class 900 RF Flanges

Length of Stud Bolt

Steel Pipe Flanges ASME B16.5 RF

Class	Nominal Size		D		D1		D2		b		d		Bolt		L1	
	NPS	DN	in	mm	in	mm	in	mm	in	mm	in	mm	Number	Diam	in	mm
600 PN110	1/2	15	3.75	95	2.62	66.5	1.38	35	0.56	14	0.62	16	4	1/2	3.00	76
	3/4	20	4.62	117	3.25	82.6	1.69	43	0.62	16	0.75	19	4	5/8	3.50	89
	1	25	4.88	124	3.50	88.9	2.00	51	0.69	18	0.75	19	4	5/8	3.50	89
	1 1/4	32	5.25	133	3.88	98.6	2.50	64	0.81	21	0.75	19	4	5/8	3.75	95
	1 1/2	40	6.12	155	4.50	114.3	2.88	73	0.88	22	0.88	22	4	3/4	4.25	108
	2	50	6.50	165	5.00	127.0	3.62	92	1.00	25	0.75	19	8	5/8	4.25	108
	2 1/2	65	7.50	191	5.88	149.4	4.12	105	1.12	28	0.88	22	8	3/4	4.75	121
	3	80	8.25	210	6.62	168.1	5.00	127	1.25	32	0.88	22	8	3/4	5.00	127
	4	100	10.75	273	8.50	215.9	6.19	157	1.50	38	1.00	25	8	7/8	5.75	146
	5	125	13.00	330	10.50	266.7	7.31	186	1.75	44	1.12	28	8	1	6.50	165
	6	150	14.00	356	11.50	292.1	8.50	216	1.88	48	1.12	29	12	1	6.75	171
	8	200	16.50	419	13.75	349.3	10.62	270	2.19	56	1.25	32	12	1 1/8	7.50	191
	10	250	20.00	508	17.00	431.8	12.75	324	2.50	63.5	1.38	35	16	1 1/4	8.50	216
	12	300	22.00	559	19.25	489.0	15.00	381	2.62	67	1.38	35	20	1 1/4	8.75	222
	14	350	23.75	603	20.75	527.1	16.25	413	2.75	70	1.50	38	20	1 1/4	9.25	235
	16	400	27.00	686	23.75	603.3	18.50	470	3.00	76.5	1.62	41	20	1 1/2	10.00	254
	18	450	29.25	743	25.75	654.1	21.00	533	3.25	83	1.75	44	20	1 5/8	10.75	273
	20	500	32.00	813	28.50	723.9	23.00	584	3.50	89	1.75	44	24	1 5/8	11.25	286
	24	600	37.00	940	33.00	838.2	27.25	692	4.00	102	2.00	52	24	1 7/8	13.00	330
900 PN150	1/2	15	4.75	121	3.25	82.6	1.38	35	0.88	22.5	0.88	22	4	3/4	4.25	108
	3/4	20	5.12	130	3.50	88.9	1.69	43	1.00	25.5	0.88	22	4	3/4	4.50	114
	1	25	5.88	149	4.00	101.6	2.00	51	1.12	29	1.00	25	4	7/8	5.00	127
	1 1/4	32	6.25	159	4.38	111.3	2.50	64	1.12	29	1.00	25	4	7/8	5.00	127
	1 1/2	40	7.00	178	4.88	124.0	2.88	73	1.25	32	1.12	28	4	1	5.50	140
	2	50	8.50	216	6.50	165.1	3.62	92	1.50	38.5	1.00	25	8	7/8	5.75	146
	2 1/2	65	9.62	244	7.50	190.5	4.12	105	1.62	41.5	1.12	28	8	1	6.25	159
	3	80	9.50	241	7.50	190.5	5.00	127	1.50	38.5	1.00	25	8	7/8	5.75	146
	4	100	11.50	292	9.25	235.0	6.19	157	1.75	44.5	1.25	32	8	1 1/8	6.75	171
	5	125	13.75	349	11.00	279.4	7.31	186	2.00	51	1.38	35	8	1 1/4	7.50	191
	6	150	15.00	381	12.50	317.5	8.50	216	2.19	56	1.25	32	12	1 1/8	7.50	191
	8	200	18.50	470	15.50	393.7	10.62	270	2.50	63.5	1.50	39	12	1 3/8	8.75	222
	10	250	21.50	546	18.50	469.9	12.75	324	2.75	70	1.50	39	16	1 3/8	9.25	235
	12	300	24.00	610	21.00	533.4	15.00	381	3.12	79.50	1.50	39	20	1 3/8	10.00	254
	14	350	25.25	641	22.00	558.8	16.25	413	3.38	86	1.62	42	20	1 1/2	10.75	273
	16	400	27.75	705	24.25	616.0	18.50	470	3.50	89	1.75	44	20	1 5/8	11.25	286
	18	450	31.00	787	27.00	685.8	21.00	533	4.00	102	2.00	51	20	1 7/8	12.75	324
	20	500	33.75	857	29.50	749.3	23.00	584	4.25	108	2.12	54	20	2	13.75	349
	24	600	41.00	1041	35.50	901.7	27.25	692	5.50	140	2.62	67	20	2 1/2	17.25	438

API PIPE FLANGES

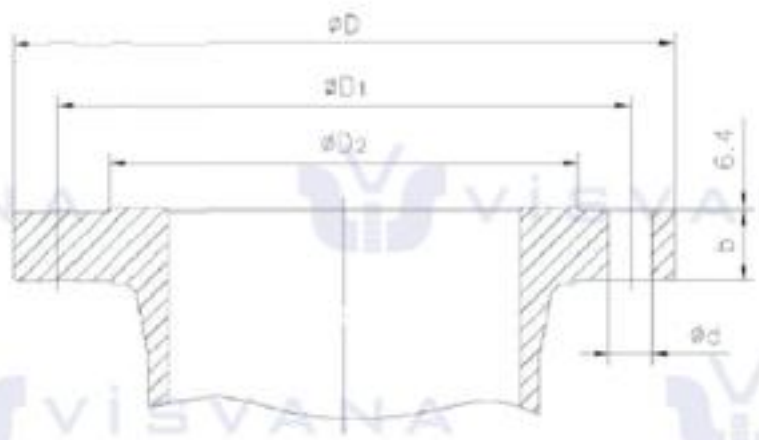

Class 1500 - Class 2500 RF Flanges

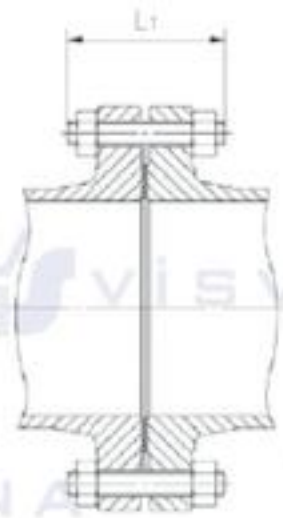

Length of Stud Bolt

Steel Pipe Flanges ASME B16.5 RF

Class	Nominal Size		D		D1		D2		b		d		Bolt		L1	
	NPS	DN	in	mm	in	mm	in	mm	in	mm	in	mm	Number	Diam	in	mm
1500 PN260	1/2	15	4.75	121	3.25	82.6	1.38	35	0.88	22.5	0.88	22	4	3/4	4.25	108
	3/4	20	5.12	130	3.50	88.9	1.69	43	1.00	25.5	0.88	22	4	3/4	4.50	114
	1	25	5.88	149	4.00	101.6	2.00	51	1.12	29	1.00	25	4	7/8	5.00	127
	1 1/4	32	6.25	159	4.38	111.3	2.50	64	1.12	29	1.00	25	4	7/8	5.00	127
	1 1/2	40	7.00	178	4.88	124.0	2.88	73	1.25	32	1.12	28	4	1	5.50	140
	2	50	8.50	216	6.50	165.1	3.62	92	1.50	38.5	1.00	26	8	7/8	5.75	146
	2 1/2	65	9.62	244	7.50	190.5	4.12	105	1.62	41.5	1.12	28	8	1	6.25	159
	3	80	10.50	267	8.00	203.2	5.00	127	1.88	48	1.25	32	8	1 1/8	7.00	178
	4	100	12.25	311	9.50	241.3	6.19	157	2.12	54	1.38	35	8	1 1/4	7.75	197
	5	125	14.75	375	11.50	292.1	7.31	186	2.88	73.5	1.62	41	8	1 1/2	9.75	248
	6	150	15.50	394	12.50	317.5	8.50	216	3.25	83	1.50	38	12	1 3/8	10.25	260
	8	200	19.00	483	15.50	393.7	10.62	270	3.62	92	1.75	44	12	1 5/8	11.50	292
	10	250	23.00	585	19.00	482.6	12.75	324	4.25	108	2.00	51	12	1 7/8	13.25	337
	12	300	26.50	675	22.50	571.5	15.00	381	4.88	124	2.12	54	16	2	14.75	375
	14	350	29.50	750	25.00	635.0	16.25	413	5.25	133.5	2.38	61	16	2 1/4	16.00	406
	16	400	32.50	826	27.75	704.9	18.50	470	5.75	146.5	2.62	67	16	2 1/2	17.50	445
	18	450	36.00	914	30.50	774.7	21.00	533	6.38	162	2.88	74	16	2 3/4	19.50	495
	20	500	38.75	985	32.75	831.9	23.00	584	7.00	178	3.12	80	16	3	21.25	540
	24	600	46.00	1168	39.00	990.6	27.25	692	8.00	203.5	3.62	92	16	3 1/2	24.25	616
2500 PN420	1/2	15	5.25	133	3.50	88.9	1.38	35	1.19	30.5	0.88	22	4	3/4	4.75	121
	3/4	20	5.50	140	3.75	95.3	1.69	43	1.25	32	0.88	22	4	3/4	5.00	127
	1	25	6.25	159	4.25	108.0	2.00	51	1.38	35	1.00	25	4	7/8	5.50	140
	1 1/4	32	7.25	184	5.12	130.0	2.50	64	1.50	38.5	1.12	28	4	1	6.00	152
	1 1/2	40	8.00	203	5.75	146.1	2.88	73	1.75	44.5	1.25	32	4	1 1/8	6.75	171
	2	50	9.25	235	6.75	171.5	3.62	92	2.00	51	1.12	28	8	1	7.00	178
	2 1/2	65	10.50	267	7.75	196.9	4.12	105	2.25	57.5	1.25	32	8	1 1/8	7.75	197
	3	80	12.00	305	9.00	228.6	5.00	127	2.62	67	1.38	35	8	1 1/4	8.75	222
	4	100	14.00	356	10.75	273.1	6.19	157	3.00	76.5	1.62	41	8	1 1/2	10.00	254
	5	125	16.50	419	12.75	323.9	7.31	186	3.62	92.5	1.88	48	8	1 3/4	11.75	298
	6	150	19.00	483	14.50	368.3	8.50	216	4.25	108	2.12	54	8	2	13.50	343
	8	200	21.75	552	17.25	438.2	10.62	270	5.00	127	2.12	54	12	2	15.00	381
	10	250	26.50	675	21.25	539.8	12.75	324	6.50	165.5	2.62	67	12	2 1/2	19.25	489
	12	300	30.00	762	24.38	619.3	15.00	381	7.25	184.5	2.88	73	12	2 3/4	21.25	540

API PIPE FLANGES

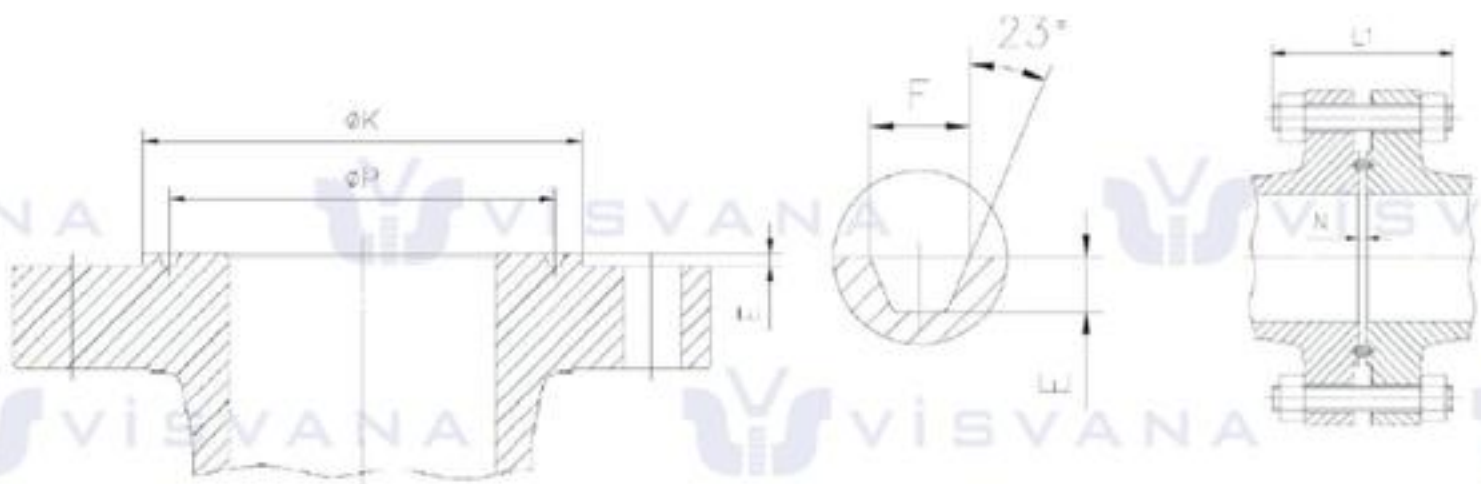

Steel Pipe Flanges ASME B16.5 RTJ

Class	Nominal Size		Ring Number	P		E		F		K		N		L1	
	NPS	DN		in	mm	in	mm	in	mm	in	mm	in	mm	in	mm
150	1	25	R15	1.875	47.63	0.25	6.35	0.344	8.74	2.50	64	0.16	4	3.00	76
	1 1/4	32	R17	2.250	57.15	0.25	6.35	0.344	8.74	2.88	73	0.16	4	3.25	83
	1 1/2	40	R19	2.562	65.07	0.25	6.35	0.344	8.74	3.25	83	0.16	4	3.25	83
	2	50	R22	3.250	82.55	0.25	6.35	0.344	8.74	4.00	102	0.16	4	3.75	95
	2 1/2	65	R25	4.000	101.60	0.25	6.35	0.344	8.74	4.75	121	0.16	4	4.00	102
	3	80	R29	4.500	114.30	0.25	6.35	0.344	8.74	5.25	133	0.16	4	4.00	102
	4	100	R36	5.875	149.23	0.25	6.35	0.344	8.74	6.75	171	0.16	4	4.00	102
	5	125	R40	6.750	171.45	0.25	6.35	0.344	8.74	7.62	194	0.16	4	4.25	108
	6	150	R43	7.625	193.68	0.25	6.35	0.344	8.74	8.62	219	0.16	4	4.50	114
	8	200	R48	9.750	247.65	0.25	6.35	0.344	8.74	10.75	273	0.16	4	4.75	121
	10	250	R52	12.000	304.80	0.25	6.35	0.344	8.74	13.00	330	0.16	4	5.00	127
	12	300	R56	15.000	381.00	0.25	6.35	0.344	8.74	16.00	406	0.16	4	5.25	133
	14	350	R59	15.625	396.88	0.25	6.35	0.344	8.74	16.75	425	0.12	3	5.75	146
	16	400	R64	17.875	454.03	0.25	6.35	0.344	8.74	19.00	483	0.12	3	5.75	146
	18	450	R68	20.375	517.53	0.25	6.35	0.344	8.74	21.50	546	0.12	3	6.25	159
	20	500	R72	22.000	558.80	0.25	6.35	0.344	8.74	23.50	597	0.12	3	6.75	171
	24	600	R76	26.500	673.10	0.25	6.35	0.344	8.74	28.00	711	0.12	3	7.25	184
	1	25	R16	2.000	50.80	0.25	6.35	0.344	8.74	2.75	70	0.16	4	3.50	89
	1 1/4	32	R18	2.375	60.33	0.25	6.35	0.344	8.74	3.12	79	0.16	4	3.75	95
300	1 1/2	40	R20	2.688	68.28	0.25	6.35	0.344	8.74	3.56	90	0.16	4	4.00	102
	2	50	R23	3.250	82.55	0.312	7.92	0.469	11.91	4.25	108	0.22	6	4.00	102
	2 1/2	65	R26	4.000	101.60	0.312	7.92	0.469	11.91	5.00	127	0.22	6	4.50	114
	3	80	R31	4875	123.83	0.312	7.92	0.469	11.91	5.75	146	0.22	6	4.75	121
	4	100	R37	5.875	149.23	0.312	7.92	0.469	11.91	6.88	175	0.22	6	5.00	127
	5	125	R41	7.125	180.98	0.312	7.92	0.469	11.91	8.25	210	0.22	6	5.25	133
	6	150	R45	8.312	211.12	0.312	7.92	0.469	11.91	9.50	241	0.22	6	5.50	140
	8	200	R49	10.625	269.88	0.312	7.92	0.469	11.91	11.88	302	0.22	6	6.00	152
	10	250	R53	12.750	323.85	0.312	7.92	0.469	11.91	14.00	356	0.22	6	6.75	171
	12	300	R57	15.000	381.00	0.312	7.92	0.469	11.91	16.25	413	0.22	6	7.25	184
	14	350	R61	16.500	419.10	0.312	7.92	0.469	11.91	18.00	457	0.22	6	7.50	191
	16	400	R65	18.500	469.90	0.312	7.92	0.469	11.91	20.00	508	0.22	6	8.00	203
	18	450	R69	21.000	533.40	0.312	7.92	0.469	11.91	22.62	575	0.22	6	8.25	210
	20	500	R73	23.000	584.20	0.375	9.53	0.531	13.49	25.00	635	0.22	6	8.75	222
	24	600	R77	27.250	692.15	0.438	11.13	0.656	16.66	29.50	749	0.25	6	10.00	254

Steel Pipe Flanges ASME B16.5 RTJ

Class	Nominal Size		Ring Number	P		E		F		K		N		L1	
	NPS	DN		in	mm	in	mm	in	mm	in	mm	in	mm	in	mm
600	1	25	R16	2.000	50.80	0.250	6.35	0.344	8.74	2.75	70	0.16	4	3.50	89
	1 1/4	32	R18	2.375	60.33	0.250	6.35	0.344	8.74	3.12	79	0.16	4	3.75	95
	1 1/2	40	R20	2.688	68.28	0.250	6.35	0.344	8.74	3.56	90	0.16	4	4.25	108
	2	50	R23	3.250	82.55	0.312	7.92	0.469	11.91	4.25	108	0.19	5	4.25	108
	2 1/2	65	R26	4.000	101.60	0.312	7.92	0.469	11.91	5.00	127	0.19	5	4.75	121
	3	80	R31	4.875	123.83	0.312	7.92	0.469	11.91	5.75	146	0.19	5	5.00	127
	4	100	R37	5.875	149.23	0.312	7.92	0.469	11.91	6.88	175	0.19	5	5.75	146
	5	125	R41	7.125	180.98	0.312	7.92	0.469	11.91	8.25	210	0.19	5	6.50	165
	6	150	R45	8.312	211.12	0.312	7.92	0.469	11.91	9.50	241	0.19	5	6.75	171
	8	200	R49	10.625	269.88	0.312	7.92	0.469	11.91	11.88	302	0.19	5	7.75	197
	10	250	R53	12.750	323.85	0.312	7.92	0.469	11.91	14.00	356	0.19	5	8.50	216
	12	300	R57	15.000	381.00	0.312	7.92	0.469	11.91	16.25	413	0.19	5	8.75	222
	14	350	R61	16.500	419.10	0.312	7.92	0.469	11.91	18.00	457	0.19	5	9.25	235
	16	400	R65	18.500	469.90	0.312	7.92	0.469	11.91	20.00	508	0.19	5	10.00	254
	18	450	R69	21.000	533.40	0.312	7.92	0.469	13.49	22.62	575	0.19	5	10.75	273
	20	500	R73	23.000	584.20	0.375	9.53	0.531	26.97	25.00	635	0.19	5	11.50	292
	24	600	R77	27.250	692.15	0.438	15.88	0.656	8.74	29.50	749	0.22	6	13.25	337
900	1	25	R16	2.000	50.80	0.250	6.35	0.344	8.74	2.81	71	0.16	4	5.00	127
	1 1/4	32	R18	2.375	60.33	0.250	6.35	0.344	8.74	3.19	81	0.16	4	5.00	127
	1 1/2	40	R20	2.688	68.28	0.250	6.35	0.344	11.91	3.62	92	0.16	4	5.50	140
	2	50	R24	3.750	95.25	0.312	7.92	0.469	11.91	4.88	124	0.12	3	5.75	146
	2 1/2	65	R27	4.250	107.95	0.312	7.92	0.469	11.91	5.38	137	0.12	3	6.25	159
	3	80	R31	4.875	123.83	0.312	7.92	0.469	11.91	6.12	155	0.16	4	5.75	146
	4	100	R37	5.875	149.23	0.312	7.92	0.469	11.91	7.12	181	0.16	4	6.75	171
	5	125	R41	7.125	180.98	0.312	7.92	0.469	11.91	8.50	216	0.16	4	7.50	191
	6	150	R45	8.312	211.12	0.312	7.92	0.469	11.91	9.50	241	0.16	4	7.75	197
	8	200	R49	10.625	269.88	0.312	7.92	0.469	11.91	12.12	308	0.16	4	8.75	222
	10	250	R53	12.750	323.85	0.312	7.92	0.469	11.91	14.25	362	0.16	4	9.25	235
	12	300	R57	15.000	381.00	0.312	7.92	0.469	11.91	16.50	419	0.16	4	10.00	254
	14	350	R62	16.500	419.10	0.438	11.13	0.656	16.66	18.38	467	0.16	4	11.00	279
	16	400	R66	18.500	469.90	0.438	11.13	0.656	16.66	20.62	524	0.16	4	11.50	292
	18	450	R70	21.000	533.40	0.500	12.70	0.781	19.84	23.38	594	0.19	5	13.25	337
	20	500	R74	23.000	584.20	0.500	12.70	0.781	19.84	25.50	648	0.19	5	14.25	362
	24	600	R78	27.250	692.15	0.625	15.88	1.062	26.97	30.38	772	0.22	6	18.00	457
1500	1	25	R16	2.000	50.80	0.250	6.35	0.344	8.74	2.81	71	0.16	4	5.00	127
	1 1/4	32	R18	2.375	60.33	0.250	6.35	0.344	8.74	3.19	81	0.16	4	5.00	127
	1 1/2	40	R20	2.688	68.28	0.250	6.35	0.344	8.74	3.62	92	0.16	4	5.50	140
	2	50	R24	3.750	95.25	0.312	7.92	0.469	11.91	4.88	124	0.12	3	5.75	146
	2 1/2	65	R27	4.250	107.95	0.312	7.92	0.469	11.91	5.38	137	0.12	3	6.25	159
	3	80	R35	5.375	136.53	0.312	7.92	0.469	11.91	6.62	168	0.12	3	7.00	178
	4	100	R39	6.375	161.93	0.312	7.92	0.469	11.91	7.62	194	0.12	3	7.75	197
	5	125	R44	7.625	193.68	0.312	7.92	0.469	11.91	9.00	229	0.12	3	9.75	248
	6	150	R46	8.312	211.12	0.375	9.52	0.531	13.49	9.75	248	0.12	3	10.50	267
	8	200	R50	10.625	269.88	0.438	11.13	0.656	16.66	12.50	318	0.16	4	12.75	324
	10	250	R54	12.750	323.85	0.438	11.13	0.656	16.66	14.62	371	0.16	4	13.50	343
	12	300	R58	15.000	381.00	0.562	14.27	0.906	23.01	17.25	438	0.19	5	15.25	387
	14	350	R63	16.500	419.10	0.625	15.88	1.062	26.97	19.25	489	0.22	6	16.75	425
	16	400	R67	18.500	469.90	0.688	17.48	1.188	30.18	21.50	546	0.31	8	18.50	470
	18	450	R71	21.000	533.40	0.688	17.48	1.188	30.18	24.12	613	0.31	8	20.75	527
	20	500	R75	23.000	584.20	0.688	17.48	1.188	33.32	26.50	673	0.38	10	22.25	565
	24	600	R79	27.250	692.15	0.812	20.62	1.312	36.53	31.25	794	0.44	11	25.50	648
2500	1	25	R18	2.375	60.33	0.250	6.35	1.438	8.74	3.25	83	0.16	4	5.50	140
	1 1/4	32	R21	2.844	72.24	0.312	7.92	0.344	11.94	4.00	102	0.12	3	6.00	152
	1 1/2	40	R23	3.250	82.55	0.312	7.92	0.469	11.94	4.50	114	0.12	3	6.75	171
	2	50	R26	4.000	101.60	0.312	7.92	0.469	11.91	5.25	133	0.12	3	7.00	178
	2 1/2	65	R28	4.375	111.13	0.375	9.53	0.531	13.49	5.88	149	0.12	3	8.00	203
	3	80	R32	5.000	127.00	0.375	9.53	0.531	13.49	6.62	168	0.12	3	9.00	229
	4	100	R38	6.188	157.18	0.438	11.13	0.656	16.66	8.00	203	0.16	4	10.25	260
	5	125	R42	7.500	190.50	0.500	12.70	0.781	19.84	9.50	241	0.16	4	12.25	311
	6	150	R47	9.000	228.60	0.500	12.70	0.781	19.84	11.00	279	0.16	4	14.00	356
	8	200	R51	11.000	279.40	0.562	14.27	0.906	23.01	13.38	340	0.19	5	15.50	394
	10	250	R55	13.500	342.90	0.688	17.48	1.188	30.18	16.75	425	0.25	6	20.00	508
	12	300	R60	16.000	406.40	0.688	17.48	1.312	33.32	19.50	495	0.31	8	22.00	559

API PIPE FLANGES

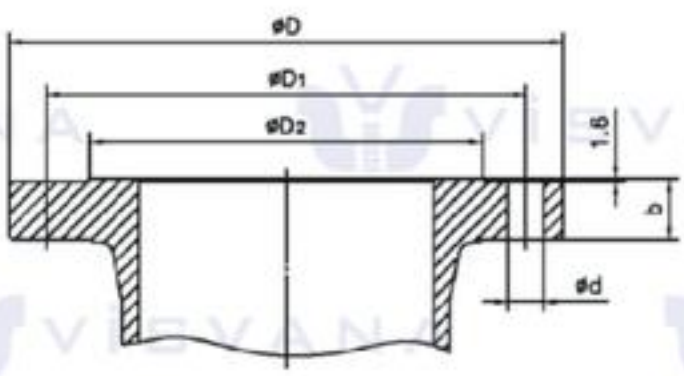

Class 150 & Class 300 RF Flanges

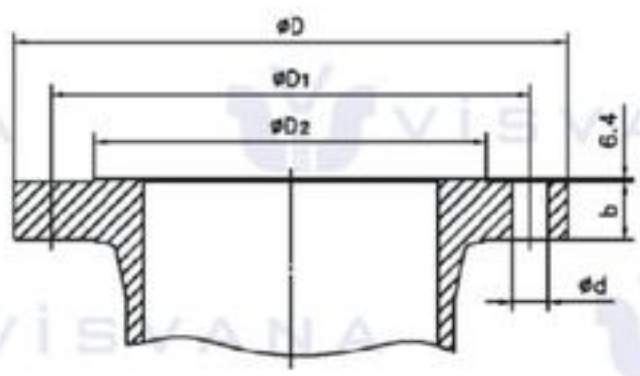

Class 600 & Class 900 RF Flanges

Steel Pipe Flanges ASME B16.47 Series A & MSS SP 44 RF

Class	Nominal Size		D		D1		D2		b		d		Bolt	
	NPS	DN	in	mm	in	mm	in	mm	in	mm	in	mm	Number	Diam
150	26	650	34.25	870	31.75	806.5	29.50	749	2.69	68.5	1.38	35	24	1 1/4
	28	700	36.50	927	34.00	863.6	31.50	800	2.81	71.5	1.38	35	28	1 1/4
	30	750	38.75	984	36.00	914.4	33.75	857	3.94	75	1.38	35	28	1 1/4
	32	800	41.75	1060	38.50	977.9	36.00	914	3.19	81.5	1.62	41	28	1 1/2
	34	850	43.75	1111	40.50	1028.7	38.00	965	3.25	83	1.62	41	32	1 1/2
	36	900	46.00	1168	42.75	1085.9	40.25	1022	3.56	90.5	1.62	41	32	1 1/2
	38	950	48.75	1238	45.25	1149.4	42.25	1073	3.44	87.5	1.62	41	32	1 1/2
	40	1000	50.75	1289	47.25	1200.2	44.25	1124	3.56	90.5	1.62	41	36	1 1/2
	42	1050	53.00	1346	49.50	1257.3	47.00	1194	3.81	97	1.62	41	36	1 1/2
	48	1200	59.50	1511	56.00	1422.4	53.50	1359	4.25	108	1.62	41	44	1 1/2
	54	1350	66.25	1683	62.75	1593.9	59.50	1511	4.75	121	1.88	48	44	1 3/4
	56	1400	68.75	1746	65.00	1651.0	62.00	1575	4.88	124	1.88	48	48	1 3/4
	60	1500	73.00	1854	69.25	1759.0	66.00	1676	5.19	132	1.88	48	52	1 3/4
300	26	650	38.25	972	34.50	876.3	29.50	749	3.12	79.5	1.75	44	28	1 5/8
	28	700	40.75	1035	37.00	939.8	31.50	800	3.38	86	1.75	44	28	1 5/8
	30	750	43.00	1092	39.25	997.0	33.75	857	3.62	92	1.88	48	28	1 3/4
	32	800	45.25	1149	41.50	1054.1	36.00	914	3.88	99	2.00	51	28	1 7/8
	34	850	47.50	1207	43.50	1104.9	38.00	965	4.00	102	2.00	51	28	1 7/8
	36	900	50.00	1270	46.00	1168.4	40.25	1022	4.12	105	2.12	54	32	2
	38	950	46.00	1168	43.00	1092.2	40.50	1029	4.25	108	1.62	41	32	1 1/2
	40	1000	48.75	1238	45.50	1155.7	42.75	1086	4.50	114.5	1.75	44	32	1 5/8
	42	1050	50.75	1289	47.50	1206.5	44.75	1137	4.69	119.5	1.75	44	32	1 5/8
	48	1200	57.75	1467	54.00	1371.6	51.25	1302	5.25	133.5	2.00	51	32	1 7/8
600	26	650	40.00	1016	36.00	914.4	29.50	749	4.25	108	2.00	51	28	1 7/8
	28	700	42.25	1073	38.00	965.2	31.50	800	4.38	111.5	2.12	54	28	2
	30	750	44.50	1130	40.25	1022.4	33.75	857	4.50	114.5	2.12	54	28	2
	32	800	47.00	1194	42.50	1079.5	36.00	914	4.62	117.5	2.38	60	28	2 1/4
	34	850	49.00	1245	44.50	1130.3	38.00	965	4.75	121	2.38	60	28	2 1/4
	36	900	51.75	1314	47.00	1193.8	40.25	1022	4.88	124	2.62	67	28	2 1/2
900	26	650	42.75	1080	37.50	952.5	29.50	749	5.50	140	2.88	73	20	2 3/4
	28	700	46.00	1168	40.25	1022.4	31.50	800	5.62	143	3.12	79	20	3

API PIPE FLANGES

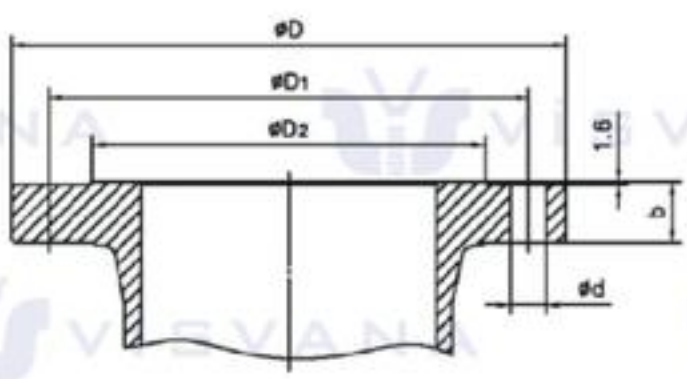

Class 150 & Class 300 RF Flanges

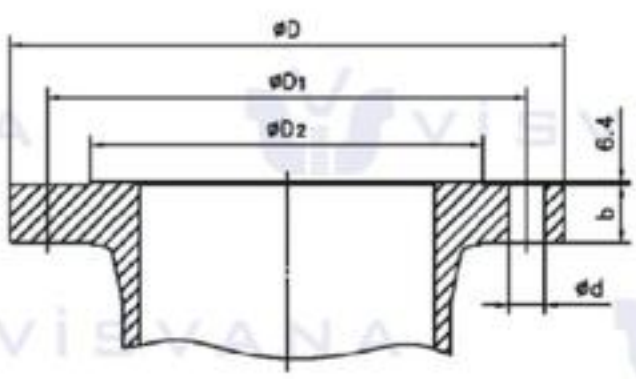

Class 600 & Class 900 RF Flanges

Steel Pipe Flanges ASME B16.47 Series B & API 605 RF

Class	Nominal Size		D		D1		D2		b		d		Bolt	
	NPS	DN	in	mm	in	mm	in	mm	in	mm	in	mm	Number	Diam
150	26	650	30.94	786	29.31	744.5	28.00	711	1.62	41.5	0.88	22	36	3/4
	28	700	32.94	837	31.31	795.3	30.00	762	1.75	44.5	0.88	22	40	3/4
	30	750	34.94	887	33.31	846.1	32.00	813	1.75	44.5	0.88	22	44	3/4
	32	800	37.06	941	35.44	900.2	34.00	864	1.81	46	0.88	22	48	3/4
	34	850	39.56	1005	37.69	957.3	36.25	921	1.94	49.5	1.00	25	40	7/8
	36	900	41.62	1057	39.75	1009.7	38.25	972	2.06	52.5	1.00	25	44	7/8
	38	950	44.25	1124	42.12	1069.8	40.25	1022	2.12	54	1.12	28	40	1
	40	1000	46.25	1175	44.12	1120.6	42.50	1080	2.19	56	1.12	28	44	1
	42	1050	48.25	1226	46.12	1171.4	44.50	1130	2.31	59	1.12	28	48	1
	48	1200	54.81	1392	52.56	1335.0	50.75	1289	2.56	64.5	1.25	32	44	1 1/8
	54	1350	61.00	1549	58.75	1492.3	56.75	1441	2.81	71.5	1.25	32	56	1 1/8
	56	1400	63.00	1600	60.75	1543.1	58.75	1492	2.88	73.5	1.25	32	60	1 1/8
	60	1500	67.94	1726	65.44	1662.2	63.00	1600	3.00	76.5	1.38	35	52	1 1/4
300	26	650	34.12	867	31.62	803.1	29.00	737	3.50	89	1.38	35	32	1 1/4
	28	700	36.25	921	33.75	857.3	31.00	787	3.50	89	1.38	35	36	1 1/4
	30	750	39.00	991	36.25	920.8	33.25	845	3.69	94	1.50	38	36	1 3/8
	32	800	41.50	1054	38.50	977.9	35.50	902	4.06	103.5	1.62	41	32	1 1/2
	34	850	43.62	1108	40.62	1031.7	37.50	953	4.06	103.5	1.62	41	36	1 1/2
	36	900	46.12	1171	42.88	1089.2	39.75	1010	4.06	103.5	1.75	44	32	1 5/8
	38	950	48.12	1222	44.88	1140.0	41.75	1060	4.38	111.5	1.75	44	36	1 5/8
	40	1000	50.12	1273	46.88	1190.8	43.88	1115	4.56	116	1.75	44	40	1 5/8
	42	1050	52.50	1334	49.00	1244.6	46.00	1168	4.69	119.5	1.88	48	36	1 3/4
	48	1200	59.50	1511	55.75	1416.1	52.25	1327	5.06	129	2.00	51	40	1 7/8
600	26	650	35.00	889	31.75	806.5	28.62	727	4.38	111.5	1.75	44	28	1 5/8
	28	700	37.50	953	34.00	863.6	30.88	784	4.56	116	1.88	48	28	1 3/4
	30	750	40.25	1022	36.50	927.1	33.12	841	4.94	125.5	2.00	51	28	1 7/8
	32	800	42.75	1086	38.75	984.3	35.25	895	5.12	130.5	2.12	54	28	2
	34	850	45.75	1162	41.50	1054.1	37.50	953	5.56	141.5	2.38	60	24	2 1/4
	36	900	47.75	1213	43.50	1104.9	39.75	1010	5.75	146.5	2.38	60	28	2 1/4
900	26	650	40.25	1022	35.50	901.7	30.00	762	5.31	135	2.62	67	20	2 1/2
	28	700	43.50	1105	38.25	971.6	32.25	819	5.81	148	2.88	73	20	2 3/4

DIN 2401 MALZEME - SICAKLIK BAĞLANTI NORMU

	Vanalar - Valves				Sıcaklığa (°C) göre max. Çalışma basıncı (bar)										
	Demir Döküm	Sfero Döküm	Çelik Döküm	Çelik	20	200	250	300	350	400	425	450	500	520	550
PN	Cast Iron	Ductile Iron	Cast Steel	Steel	120'										
6	GG-25	GGG 40	------	St-37/2	6										
					6	5	4.5	3.6							
10	GG-25	GGG 40	GS-45	St-37/2	10										
					10	8	7	6							
16	GG-25	GGG 40	GS-45	St-37/2	16										
					16	13	11	10							
	------	------	GS-C 25	C 22 N	16	14	13	11	10	8					
25	------	GGG 40	GS-45.5	C 22 N	25	-----									
					25	20	18	16							
			GS-C 25		25	22	20	17	16	13					
			GS-22 Mo 4	15 Mo 3			25	22	20	19	18	17			
			GS-17 CrMo 55	13 Cr Mo 44				25	24	23	22	21	18	12	
40	------	------	GS-45.5	C 22 N	40	32	28	24							
					40										
			GS-C 25		40	35	32	28	24	21					
			GS-22 Mo 4	15 Mo 3			40	35	31	30	29	28			
			GS-17 CrMo 55	13 Cr Mo 44				40	38	36	35	33	29	19	
63	------	------	GS-C 25	C 22 N	63	36	29	24							
					63	50	45	40							
					63										
					63	50	45	40	36	32					
			GS-22 Mo 4	15 Mo 3			64	56	50	47	46	45			
			GS-17 CrMo 55	13 Cr Mo 44				64	61	58	57	56	53	32	
100	------	------	GS-C 25	C 22 N	100	80	70	60							
					100										
					100	80	70	60	56	50					
			GS-22 Mo 4	15 Mo 3			100	87	78	74	72	70			
			GS-17 CrMo 55	13 Cr Mo 44				100	95	91	89	87	74	62	
160	------	------	GS-C 25	C 22 N	160	130	112	96							
					160										
					160	130	112	96	90	80					
			GS-22 Mo 4	15 Mo 3			160	139	125	118	115	112			
			GS-17 CrMo 55	13 Cr Mo 44				160	153	146	142	139	118	79	
				10 Cr Mo 9 10											52
250	------	------	GS-C 25	C 22 N	250	200	175	150							
					250										
					250	200	175	150	140	125					
			GS-22 Mo 4	15 Mo 3			250	217	195	185	179	174			
			GS-17 CrMo 55	13 Cr Mo 44				250	238	227	223	217	184	124	54
				10 Cr Mo 9 10										124	81

CHEMICAL RESISTANCE -1-
MALZEMELERİN KİMYASAL DAYANIMI -1-

E: Mükemmel */ Perfect*
G: İyi */ Suitable*
F: Zayıf */ Poor*
U: Uygun değil */ Not Recomended*

Malzeme/Material	Dökme Demir / Cast Iron	Paslanmaz Çelik / Stainless Steel	Bronz / Bronze	Monel	EPDM	NBR	Viton	Doğal Lastik / Natural Rubber
Aseton (Acetone)	G	E	E	E	G	U	U	U
Amonyak/Gas (Ammonia Gas)150' F	U	E	U		G			
Amonyum Fosfat (Ammonium Phophate)	U	G	U	G	E	E		G
Amonyum Klorit (Ammonia Chloride) %50 180'F	U	G	Y	G				
Amonyum Nitrat (Ammonium Nitrate) % 5 60' F	F	E	U	G		E		
Amonyum Sülfat (Ammonium Sulphate)	U	G	U	G	E	E	E	
Aseti Asit (Acetic Acid) % 50 50' F	U	E	U	F	G	U		F
Asfalt (Asphalt)	E	E	E	E		U	E	U
Atık Su (Sewage Water)	U	E	E	E	E	G		
Bakır Sülfat (Copper Sulphate)	F	E	U	U	E	E	E	G
Bira (Beer-beverage)	U	E	U		E			
Biütan (Butane)	G	E	E	E	U	G	G	U
Boraks (Borax)	U	E	U	E		G		G
Borik Asit (Boric Acid) % 5 200' F	U	E	F	G	E	E		
Buhar (Steam) 300' F	U	E	G	E	E	U	U	U
Çamur (Drilling Mud)	G	E		E	U	E		U
Deniz Suyu (Sea Water) 70' F	U	G	G	E	E	G	E	
Dizel Yakıtlar (Diesel Fuels)	F	E	G	E	U	E	E	
Doğal Gaz (Natural Gas)	G	E	E		U	E	E	U
Eterler (Ethers)	U	E	E	G	U	U		U
Etil Alkol (Alcohol Ethyl)	U	E	E	E	E	G	G	G
Etilenoksit (Ethylene Oxide)	G	E			U	U	U	U
Freon	F	E	E	E	U	G	G	U
Fuel Oil	F	E	E	G	U	F	E	U
Gaz Yağı (Gasoline)	F	E	G	G	U	E	E	U
Glikoz (Glucose)	U	E	G	G		E	E	
Hava (Air)	E	E	E	E	E	E		
Hidroklorik Asit (Hydrochloride Acid) %15 60' F	U	U	U	U	E	U	E	
Hidroklorik Asit (Hydrochloride Acid) %20	U	U	U	F		U	E	U
Hidroklorik Asit (Hydrochloride Acid) %20-60	U	G	U	E		U	G	U
Hidroklorik Asit (Hydrochloride Acid) %37, 60' F	U	U	U	U	U	U	E	U
Kahve (Coffee) /Food	U	E	U		E	U	E	E
Kalsiyum Hipoklorit (Calsiyum Hypochlorite)	-	G				F		
Zeytin Yağı (Olive Oil)		E			G	E	E	U

MALZEMELERİN KİMYASAL DAYANIMI -2-

E: Mükemmel */ Perfect*
G: İyi */ Suitable*
F: Zayıf */ Poor*
U: Uygun değil */ Not Recomended*

Malzeme/Material	Dökme Demir / Cast Iron	Paslanmaz Çelik / Stainless Steel	Bronz / Bronze	Monel	EPDM	NBR	Viton	Doğal Lastik / Natural Rubber
Kalsiyum Karbonat *(Calsium Carbonate)60' F*	F			E	E	E	E	E
Kalsiyum Klorit *(Calsium Chlorate)%20*		E		G				
Kalsi. Klorit Çözeltisi *(Calsium ChlorateSolut.)*	F	E	F		E	E	E	G
Kalsiyum Sülfat *(Calsium Sulphate)*	F	E	E	G	E	E	E	E
Karbondioksit *(Carbon Dioxite)*	F	E	E		G	G	E	G
Karbonik Asit *(Carbonic Acid)*	U	G		G		E		
Kerosen *(Kerosene)*	E	E	E	E	U	E	E	U
LaktikAsit *(Lactic Acid) % 5*	U	G	U	G		F		
Metan *(Metane)*	U	E	E		U	E	E	U
Metil Alkol *(Alcohol Methyle)*	U	E	E	E	E	G	U	G
Meyva Suları *(Fruid Juice) /Food*	U	E	Y		G	G		
Magnezyum Klorit *(Magnesyum Chloride) %4*	F	G	F	G	E	E	E	E
Mineral Su *(Mineral Water)*	F	E	E	E	E	G		
Mineral Yağ *(Mineral Oil)*	F	F			U	E	E	U
Nitrik Asit *(Nitric Acid) %40'dan az(less) 70' F*	U		U	U	U	U	E	U
Oksijen *(Oxygene) 200' F*	U	U	U	U	U	U	F	U
Oksijen *(Oxygene) 300' F*	E	E	E	E	E	G	E	F
Petrol *(Petroleum)*	U	G	F	G	U	E	E	U
Potasyum Nitrat *(Potassium Nitrate)*	F	E	F	G	E	E	E	E
Potasyum Sülfat *(Potassium Sulphate)*	U	E				E		
Propan *(Propane)*	F	E	E		U	E	E	
Sitrik Asit *(Citrik Acide) %5 ,150' F*	U	E	F	G	E	G	E	U
Sodyum Karbonat *(Sodium Carbonate)*	U	E	G	E	E	E	E	E
Sodyum Klorit *(Sodium Chlorite)%30 , 180' F*	U	E	E	E	E	E	E	E
Sodyum Nitrat *(Sodium Nitrate)*	U	E	G	G	E	G		G
Sülfirik Asit *(Sulfuric Acid)%10*	U	G	U	U	E	U	E	F
Sülfirik Asit *(Sulfuric Acid)%50*	U	U	U	U	F	U	E	U
Sülfirik Asit *(Sulfuric Acid)%90 , 70' F*	U	U	U	U	U	U	E	U
Süt *(Milk) / Food*	U	E			E	E	E	E
Şarap ve Viski *(Wine and Whiskey)*	U	E	G	E	E	E		
Tatlı Su *(Fresh Water)*	F	E	E	E	E	G		E
Tuzlu Su-Deniz suyu *(Brine-Sea Water)*	U			G	E	E		
Yağlama Yağı *(Lubricating Oil)*	E	E	E	E	U	E	E	U

Kv VALUES
Kv DEĞERLERİ

Vana Cinsi	Valve Type	Kod/Cod	1/2" DN 15	3/4" DN 20	1" DN 25	1 1/4" DN 32	1 1/2" DN 40	2" DN 50	2 1/2" DN 65	3" DN 80	4" DN 100	5" DN 125	6" DN 150	8" DN 200
Sürgülü Vana - PN 6	Gate Valve-PN 6	VSV-04					123.30	189.00	328.80	502.90	800.00	1.291.30	1.919.00	3.773.60
Sürgülü Vana - PN 10/6	Gate Valve-PN 10/6	VSV-10					123.30	189.00	328.80	502.90	800.00	1.291.30	1.919.00	3.773.60
Sürgülü Vana - PN 16	Gate Valve-PN 16	VSV-16					123.30	189.00	328.80	502.90	800.00	1.291.30	1.919.00	3.773.60
Yük. Milli Sürgülü Vana - PN 10	Rising Stem Gate Valve-PN 10	VYM-10					123.30	189.00	328.80	502.90	800.00	1.291.30	1.919.00	3.773.60
Yük. Milli Sürgülü Vana - PN 16	Rising Stem Gate Valve-PN 16	VYM-16					123.30	189.00	328.80	502.90	800.00	1.291.30	1.919.00	3.773.60
Seviye Gös.Sürgülü Vana- PN 10	Gate Valve with Indicator- PN 10	VSG-10					123.30	189.00	328.80	502.90	800.00	1.291.30	1.919.00	3.773.60
Glob Vana	Globe Valve	VDB-16	5.20	9.20	14.40	23.60	37.00	57.70	97.60	147.80	230.90	360.90	519.60	923.80
Metal Körüklü Vana	Globe Valve with Bellow	VDBK-16	4.80	6.80	9.00	17.30	27.00	42.00	71.00	108.00	169.00	252.00	363.00	
Çekvalf - Yaylı, Flanşlı	Check Valve -Spring,Flaged	VDBC-16	5.20	9.20	14.40	23.60	37.00	57.70	97.60	147.80	230.90	360.90	519.60	923.80
Y Tipi Pislik Tutucu -PN 6	Y Type Strainers -PN 6	VYPT- 06	5.40	9.60	14.90	24.50	38.20	59.80	101.00	153.00	239.00	373.50	537.90	956.20
Y Tipi Pislik Tutucu -PN 16	Y Type Strainers -PN 16	VYPT-16	5.40	9.60	14.90	24.50	38.20	59.80	101.00	153.00	239.00	373.50	537.90	956.20
Tam Geçişli Küresel Vana -PN 6	Ball Valve Full Bore-PN 6	VSK-10					226.20	353.60	638.80	967.00	1.633.00			
Tam Geçişli Küresel Vana -PN 16	Ball Valve Full Bore-PN 16	VTKF-16	28.50	50.60	83.30	136.50	226.20	353.60	638.80	967.00	1.633.00	2.795.10	4.024.90	8000000
Kelebek Vana - Wafer Tip	Butterfly Valve -Wafer Type	VWKV-16					69.00	116.00	181.00	267.00	466.00	948.00	1.647.00	2.746.00
Kelebek Vana - Lug Tip	Butterfly Valve -Lug Type	VLKV-16					69.00	116.00	181.00	267.00	466.00	948.00	1.647.00	2.746.00
Çalpara Çek Valf	Swing Check Valve	VCCV-16	12.70	22.60	35.40	57.90	90.50	158.10	267.20	404.80	632.50	988.30	1.423.10	2.530.00
Disk Tipi Çek Vana	Disc Check Valve	VDÇV-16	4.00	7.50	11.00	19.00	28.00	40.00	70.00	92.00	145.00	200.00	315.00	520.00

PRESSURE LOSES OF FITTINGS
BAĞLANTI ELEMANLARININ BASINÇ KAYIPLARI

Sıra No	Fittins - Boru Aksamı Cinsi - Adı	Demir boru Steel pipe	Bakır boru Copper pipe
1	90' Dirsek - Normal	1.0	1.0
2	45' Dirsek - Normal	0.7	0.7
3	90' Geniş - Dirsek	0.5	0.5
4	90' Kaynaklı - Dirsek	0.5	0.5
5	Redüksiyon	0.4	0.4
6	Geniş U - Dönüşü	1.0	1.0
7	Köşe Tipi Radyatör Valfi	2.0	3.0
8	Radyatör veya Konvektör	3.0	4.0
9	Kazan,Isıtıcı - E_anjör	3.0	4.0
10	Sürgülü Vana (Şiber) % 100 Açık	0.5	0.7
	Sürgülü Vana (Şiber) % 75 Açık	2.8	3.9
	Sürgülü Vana (Şiber) % 50 Açık	12	17.0
	Sürgülü Vana (Şiber) % 25 Açık	60.0	84.0
11	Glob Vana(90' Tapa Valf) % 100 Açık	12.0	17.0
12	Çek Valf (KlapeTipi-Swing) % 100 Açık	10.0	14.0
13	Pislik Tutucu - Strainer (Kirlenme durumuna göre) 20 - 60		
14	TE PARÇASI (Gösterilen Tertip Şekillerinden Herhangi birisi için) (◇)		
	(A) Branşmanından	% 25	13.0
	Geçen Debi'ye (T)	% 75	4.0
	Toplam Debi'ye	% 50	2.3
	Oranı.....	% 25	1.9
15	TE PARÇASI (◇)		
	(A) Branşmanından	% 25	7.8
	Geçen Debi'ye (T)	% 75	2.3
	Toplam Debi'ye	% 50	1.3
	Oranı.....	% 25	0.9
16	TE PARÇASI (◇)		
	(A) Branşmanından	% 25	6.0
	Geçen Debi'ye (T)	% 75	0.6
	Toplam Debi'ye	% 50	0.15
	Oranı.....		

90° Dirseklerin Basınç Kaybı eşdeğerleri boru boyu, Metre (Su Akışı İçin)

Akış Hızı (m/sn)	BORU											
	1/2"	3/4"	1"	1 1/4"	1 1/2"	2"	2 1/2"	3"	4"	5"	6"	8"
0.3	0.36	0.51	0.66	0.90	1.05	1.35	1.62	2.01	2.58	3.15	3.66	4.62
0.6	0.42	0.57	0.75	0.99	1.17	1.53	1.80	2.25	2.85	3.51	4.11	5.19
0.9	0.45	0.60	0.81	1.08	1.26	1.62	1.92	2.40	3.06	3.75	4.38	5.52
1.2	0.45	0.63	0.84	1.11	1.32	1.68	2.01	2.49	3.18	3.93	4.56	5.76
1.5	0.48	0.66	0.87	1.17	1.35	1.77	2.10	2.61	3.33	4.08	4.74	5.94
1.8	0.51	0.69	0.90	1.20	1.41	1.80	2.16	2.67	3.42	4.20	4.89	6.15
2.1	0.51	0.69	0.90	1.23	1.44	1.86	2.22	2.73	3.51	4.29	5.01	6.30
2.4	0.51	0.72	0.93	1.26	1.47	1.89	2.25	2.79	3.57	4.38	5.13	6.45
2.7	0.54	0.72	0.96	1.29	1.50	1.92	2.31	2.85	3.66	4.47	5.22	6.57
3.0	0.54	0.75	0.96	1.29	1.53	1.95	2.34	2.91	3.72	4.56	5.31	6.66

SELECTION TABLES OF SAFETY VALVES -1-

EMNİYET VENTİLİ SEÇİM TABLOLARI -1-

Oransal Kalkışlı Yaylı Tip Emniyet Ventilleri İçin

For Proportional Spring - Loaded Safety Valves

DN	25/25			32/32			40/40			50/50			65/65			80/80			100/100		
P/ bar	B	H	S	B	H	S	B	H	S	B	H	S	B	H	S	B	H	S	B	H	S
0.5	9	11	0.50	15	18	0.88	26	32	1.53	42	51	2.43	148	183	3.71	243	298	6.10	359	441	9.02
1	16	21	0.71	27	34	1.24	46	58	2.16	73	93	3.43	211	269	5.24	345	438	8.61	510	648	12.7
1.5	23	29	0.87	38	48	1.52	65	83	2.63	104	133	4.19	265	338	6.43	431	552	10.5	639	817	15.6
2	32	41	1.01	52	68	1.76	90	116	3.04	145	187	4.84	320	412	7.42	522	672	12.1	774	993	18.0
2.5	37	49	1.13	61	79	1.96	105	136	3.41	168	217	5.42	372	481	8.30	607	784	13.6	899	1161	20.1
3	43	55	1.23	70	91	2.16	119	155	3.74	192	248	5.93	427	554	9.08	696	903	14.9	1031	1337	22.0
4	53	69	1.42	86	114	2.48	149	194	4.31	238	311	6.85	533	695	10.4	868	1134	17.2	1286	1678	25.6
5	64	83	1.59	104	136	2.78	177	232	4.82	284	373	7.66	636	834	11.7	1037	1361	19.2	1535	2014	28.5
6	74	97	1.74	121	159	3.04	206	271	5.28	330	435	8.39	737	974	12.8	1204	1587	21.1	1783	2349	31.2
7	84	111	1.88	137	181	3.29	234	310	5.71	376	497	9.06	841	1112	13.8	1371	1814	22.8	2030	2685	33.7
8	94	125	2.01	154	204	3.52	263	349	6.10	422	560	9.69	944	1252	14.8	1537	2041	22.9	2277	3021	36.1
9	104	139	2.14	170	227	3.72	291	388	6.46	467	621	10.2	1045	1391	15.7	1704	2268	25.8	2523	3357	38.3
10	114	153	2.25	187	250	3.93	320	426	6.81	512	684	10.8	1147	1530	16.6	1870	2495	27.2	2768	3692	40.4
12	135	180	2.47	221	295	4.30	376	503	7.46	604	808	11.8	1350	1808	18.1	2201	2948	29.8	3258	4360	44.2
14	155	208	2.66	253	341	4.65	432	581	8.05	694	933	12.8	1552	2087	19.6	2530	3400	32.2	3748	5030	47.8
16	175	236	2.85	286	386	4.97	488	658	8.61	783	1057	13.7	1753	2365	21.0	2860	3850	34.4	4236	5695	51.0
18	196	264	3.02	319	432	5.28	545	736	9.48	874	1181	14.5									
20	216	292	3.18	352	478	5.55	601	814	9.63	963	1306	15.3									
22	236	320	3.34	3.85	523	5.82	657	891	10.1												
24	256	348	3.49	418	568	6.08	712	968	10.5												
26	276	376	3.63	451	614	6.33	769	1046	10.9												
28	297	404	3.77	484	659	6.57	825	1123	11.4												
30	316	432	3.90	517	705	6.80	880	1201	11.8												
32	337	460	4.03	550	750	7.02															
34		488	4.15		796	7.24															
36		515	4.27		841	7.45															
38		543	4.39		887	7.66															
40		571	4.50		933	7.85															

B	Doymuş Buhar (kg/h) ***Saturated steam (kg/h)***	**H**	Hava 0 C ve 1 bar (Nm /h) Air, at 0 C ve 1 bar (Nm /h)	**S**	Su 20 C (10 kg/h) Water,at 20 C at (10 kg/h)

Tam Kalkışlı Yaylı Tip Emniyet Ventilleri İçin

For Full Lift Spring - Loaded Safety Valves

DN	25/40			32/50			40/65			50/80			65/100			80/125			100/150		
P/ bar	B	H	S	B	H	S	B	H	S	B	H	S	B	H	S	B	H	S	B	H	S
0.5	127	157	4.1	209	257	6.7	330	400	11.4	510	530	18.5	787	966	28	1285	1579	45	1906	2343	67
1	207	262	5.8	339	430	9.5	530	660	16.1	810	1020	26	1273	1617	40	2080	2641	64	3087	3919	95
1.5	270	346	7.1	443	566	11.6	670	860	19.8	1040	1330	32	1665	2128	49	2720	3476	79	4036	5159	117
2	33	428	8.2	545	701	13.4	830	1050	22.8	1280	1640	37	2049	2634	56	3348	4303	91	4968	6385	135
2.5	386	499	9.2	633	818	15	950	1230	25.5	1480	1900	41	2379	3073	63	3887	5020	102	5768	7449	150
3	440	571	10.1	721	935	16.4	1080	1400	28	1670	2160	45	2709	3512	69	4446	5737	112	6569	8514	165
4	547	713	11.7	895	1169	18.9	1350	1750	32.3	2100	2750	52	3364	4390	80	5496	7172	129	8155	10643	190
5	653	856	13.1	1069	1402	21.2	1620	2100	36.1	2500	3250	58	4017	5269	89	6561	8606	144	9736	12770	213
6	758	999	14.3	1242	1636	23.1	1900	2480	39.5	2900	3800	64	4664	6147	97	7619	10041	158	11306	14900	233
7	863	1142	15.4	1413	1870	25	2150	2800	42.7	3320	4400	69	5310	7025	105	8674	11475	171	12871	17028	252
8	968	1284	16.5	1586	2104	26.7	2400	3200	45.7	3750	4900	74	5956	7902	112	9729	12910	183	14437	19157	270
9	1072	1427	17.5	1757	2338	28.3	2700	3600	48.5	4150	5600	78	6599	8780	119	10780	14344	194	15996	21286	286
10	1177	1570	18.5	1928	2572	29.9	2950	3950	51.1	4550	6050	82	7241	9659	126	11828	15778	204	17551	23415	301
12	1385	1856	20.3	2269	3039	32.7	3500	4600	56	5400	7200	90	8523	11415	138	13923	18647	224	20661	27671	330
14	1592	2141	21.9	2608	3507	35.4	3950	5300	60.5	6100	8200	98	9795	13171	149	16000	21516	242	23743	31929	356
16	1799	2427	23.4	2946	3975	37.8	4400	5900	64.6	6900	9300	105	11067	14928	159	18078	24385	258			
18	2006	2712	24.8	3286	4442	40.1	4858	6567	68.5	7599	10273	111									
20	2212	2998	26	3624	4910	42.3	5357	7259	72.2	8380	11355	116									
22	2416	3283	27.5	3958	5378	44.4	5851	7950	75.8												
24	2625	3569	28.7	4300	5845	46.4	6357	8642	79.2												
26	2835	3854	29.8	4643	6313	48.2	6864	9333	82.4												
28	3039	4140	31	4978	6781	50	7360	10024	85.5												
30	3245	4425	32	5315	7248	51.8	7858	10716	88.5												
32	3448	4711	33.1	5648	7716	53.5															
34		4996	34.1		8183	55.2															
36		5282	35.2		8651	56.8															
38		5568	36.1		9119	58.4															
40		5853	37		9586	59.8															

SELECTION TABLES OF SAFETY VALVES -2-

EMNİYET VENTİLİ SEÇİM TABLOLARI -2-

Oransal Kalkışlı Ağırlıklı Tip Emniyet Ventilleri İçin
For Proportional,Weight - Loaded Safety Valves

DN	25/25		32/32		40/40		50/50		65/65		80/80		100/100	
P/ bar	B	H	B	H	B	H	B	H	B	H	B	H	B	H
0.5	19	22	31	37	53	64	84	102	151	182	246	296	364	440
1	29	36	47	59	81	102	129	162	231	290	375	474	556	699
1.5	38	48	62	78	106	134	170	214	304	382	494	621	731	920
2	46	59	76	96	130	165	207	263	369	468	602	762	893	1130
2.5	55	70	89	113	152	194	243	310	438	561	714	914	1060	1349
3	64	81	103	132	176	227	282	363	506	649	826	1055	1218	1568
4	78	101	129	165	221	283	354	434	631	813	1028	1319	1524	1953
5	95	122	154	200	263	340	420	545	747	972	1222	1582	1813	2348
6	110	143	179	232	305	396	489	635	875	1140	1424	1846	2111	2742
7	124	161	204	265	348	452	570	725	998	1299	1617	2110	2400	3127
8	140	182	229	297	371	509	628	816	1113	1458	1819	2373	2698	3522
9	155	203	253	331	432	565	693	909	1237	1626	2013	2637	2976	3907
10	170	223	278	365	475	620	762	1039	1360	1785	2215	2900	3276	4310
12	200	265	328	432	559	735	893	1178	1599	2112	2602	3428	3854	5081
14	232	304	377	498	642	848	1032	1363	1838	2430	2997	3656		
16	261	346	427	547	727	960	1171	1540	2085	2757	3393	4483		
18	292	386	477	630	810	1028	1258	1679	2580	3443	3788	5010		
20	323	426	524	695	873	1136	1390	1856	2850	3805				
22	352	468	575	764	982	1244	1520	2032	3118	4168				
24	383	507	626	832	1076	1353	1652	2209	3388	4530				
26	414	549	675	894	1147	1461	1783	2386	3658	4892				
28	443	588	722	963	1237	1570	1916	2562	3928	5255				
30	474	630	777	1032	1320	1678	2048	2739						
32	505	669	681	1094	1402	1785	2181	2915						
34		710		1162		1894		3092						
36		752		1230		2002		3269						
38		791		1294		2110		3446						
40		833		1310		2219		3620						

B	Doymuş Buhar (kg/h) Saturated steam (kg/h)	**H**	Hava 0' C ve 1 bar(Nm /h) Air,at 0' C ve 1 bar (Nm /h)

Tam Kalkışlı Ağırlıklı Tip Emniyet Ventilleri İçin

For Full Lift,Weight - Loaded Safety Valves

DN	25/40		32/50		40/65		50/80		65/100		80/125		100/150	
P/ bar	B	H	B	H	B	H	B	H	B	H	B	H	B	H
0.5	136	172	230	282	352	440	561	583	866	1063	1413	1737	2097	2577
1	227	288	373	473	583	726	891	1122	1400	1779	2288	2905	3396	4311
1.5	297	380	487	622	737	946	1144	1463	1832	2340	2992	3824	4440	5675
2	366	470	600	771	913	1155	1408	1804	2254	2897	3683	4733	5465	7024
2.5	424	549	696	900	1045	1353	1628	2090	2617	3380	4276	5522	6345	8194
3	484	628	793	1028	1188	1540	1837	2376	2780	3863	4891	6311	7226	9365
4	601	784	984	1286	1485	1925	2310	3025	3702	4829	6045	7889	8970	11707
5	718	941	7176	1542	1782	2310	2750	3575	4419	5788	7217	9466	10709	14047
6	833	1099	1366	1800	2090	2728	3190	4180	5130	6762	8181	11044	12436	16390
7	949	1256	1554	2057	2365	3080	3652	4840	5841	7728	9541	12622	14158	18730
8	1064	1412	1745	2314	2640	3520	4125	5390	6552	8692	10702	14201	15881	21073
9	1179	1570	1933	2572	2970	3960	4565	6160	7259	9658	11858	15778	17595	23414
10	1295	1727	2121	2830	3245	4345	5005	6655	7965	10625	13010	17355	19306	25756
12	1523	2041	2496	3343	3850	5060	5940	7920	9375	12556	15315	20511	22727	30430
14	1751	2355	2869	3858	4345	5830	6710	9020	10774	14488	17600	23668		
16	1979	2670	3240	4373	4840	6490	7590	10230	12173	16420	19886	26823		
18	2207	2983	3614	4886	5344	7224	8359	11300	13575	18352	22177	29970		
20	2433	3297	3986	5400	5893	7985	9218	12490	14970	20284				
22	2658	3611	4354	5916	6436	8745	10068	13790	16351	22216				
24	2887	3926	4730	6430	6993	9506	10938	14870	17764	24148				
26	3118	4239	5107	6944	7550	10266	11810	16059	19180	26081				
28	3343	4554	5476	7459	8096	11026	12664	17249	20560	28010				
30	3470	4867	5846	7973	8644	11787	13522	18348						
32	3790	5182	6212	8488	9185	12548	14367	19628						
34		5495		9001		13308		20187						
36		5810		9514		14069		22006						
38		6125		10030		14829		23196						
40		6435		10540		15590		24385						

FLANGE DIMENSIONS - DIN 2501

FLANŞ ÖLÇÜLERİ - DIN 2501

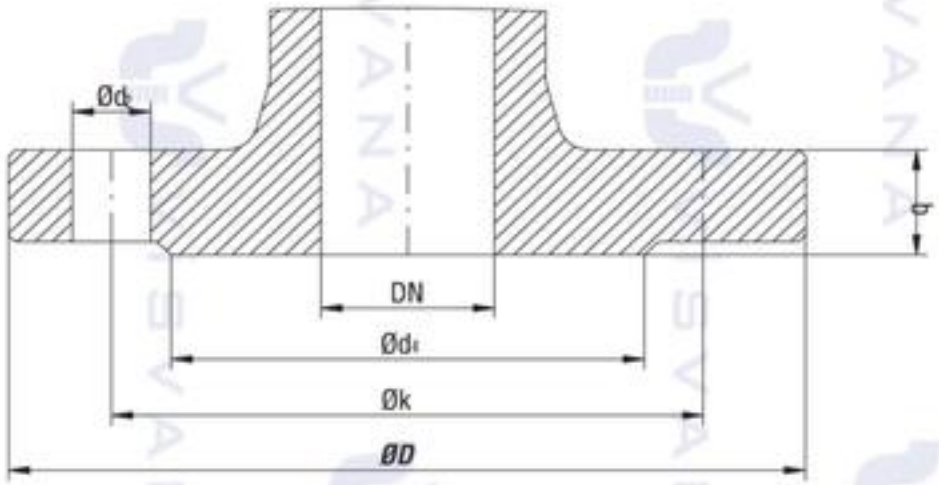

	PİK DÖKÜM-CAST IRON															SFERO DÖKÜM-DUCTILE IRON					ÇELİK DÖKÜM-CAST STEEL					
	PN 6					PN 10					PN 16					PN 25					PN 40					
DN	D	k	d_4	b	d_2xn	D	k	d_4	b	d_2xn	D	k	d_4	b	d_2xn	D	k	d_4	b	d_2xn	D	k	d_4	b	d_2xn	DN
15	80	55	40	14	12x4	95	65	45	14	14x4	95	65	45	14	14x4	95	65	45	16	14x4	95	65	45	16	14x4	15
20	90	65	50	16		105	75	58	16		105	75	58	16		105	75	58	18		105	75	58	18		20
25	100	75	60			115	85	68			115	85	68			115	85	68			115	85	68			25
32	120	90	70		14x4	140	100	78	18	18x4	140	100	78	18	18x4	140	100	78		18x4	140	100	78		18x4	32
40	130	100	80			150	110	88			150	110	88			150	110	88			150	110	88			40
50	140	110	90			165	125	102	20		165	125	102	20		165	125	102	19		165	125	102	20		50
65	160	130	110			185	145	122			185	145	122			185	145	122		18x8	185	145	122	22	18x8	65
80	190	150	128	18	18x4	200	160	138	22	18x8	200	160	138	22	18x8	200	160	138			200	160	138	24		80
100	210	170	148			220	180	158	24		220	180	158	24		235	190	162		22x8	235	190	162		22x8	100
125	240	200	178	20	18x8	250	210	188	26		250	210	188	26		270	220	188		26x8	270	220	188	26	26x8	125
150	265	225	202			285	240	212		22x8	285	240	212		22x8	300	250	218	20		300	250	218	28		150
200	320	280	258	22		340	295	268		22x8	340	295	268	30	22x12	360	310	278	22	26x12	375	320	285	34	30x12	200
250	375	335	312	24	18x12	395	350	320	28	22x12	405	355	320	32	26x12	425	370	335	24.5	30x12	450	385	345	38	33x12	250
300	440	395	365		22x12	445	400	370			460	410	378			485	430	395	27.5	30x16	515	450	410	42	33x16	300
350	490	445	415	26		505	460	430	30	22x16	520	470	438	36	26x16	555	490	450	30	33x16	580	510	465	46	36x16	350
400	540	495	465	28	22x16	565	515	482	32	26x16	580	525	490	38	30x16	620	550	505	32	36x16	660	585	535	50	39x16	400
450	595	550	520	28	22x16	615	565	532		26x20	640	585	550	40	30x20	670	600	555	34.5	36x20	685	610	560		39x20	450
500	645	600	570	30	22x20	670	620	585	34		715	650	610	42	33x20	730	660	615	36.5		755	670	615	52	42x20	500
600	755	705	670		26x20	780	725	685	36	30x20	840	770	725	48	36x20	845	770	720	42	39x20	890	795	735	60	48x20	600
700	860	810	775	32	26x24	895	840	800	40	30x24	910	840	795	54	36x24	960	875	820	46.5	42x24	995	900	840	64	48x24	700
800	975	920	880	34	30x24	1015	950	905	44	33x24	1025	950	900	58	39x24	1085	990	930	51	48x24	1140	1030	960	72	56x24	800
900	1075	1020	980	36		1115	1050	1005	46	33x28	1125	1050	1000	62	39x28	1185	1090	1030	55.5	48x28	1250	1140	1070	76	56x28	900
1000	1175	1120	1080		30x28	1230	1160	1110	50	36x28	1255	1170	1115	66	42x28	1320	1210	1140	60	56x28	1360	1250	1180	80		1000
1100						1340	1270	1210	52	36x32	1355	1270	1210	70	42x32											1100
1200	1405	1560	1295	40	33x32	1455	1380	1330	56	39x32	1485	1390	1330	76	49x32	1530	1420	1350	69	56x32	1575	1460	1380	88	62x32	1200
1400	1630	1760	1510	44	36x36	1675	1590	1535	62	42x36	1685	1590	1535	80	49x36	1755	1640	1560	74	62x36	1795	1680	1600	98	62x36	1400

FLANGE DIMENSIONS - ANSI B16.5 CLASS

FLANŞ ÖLÇÜLERİ - ANSI B16.5 CLASS

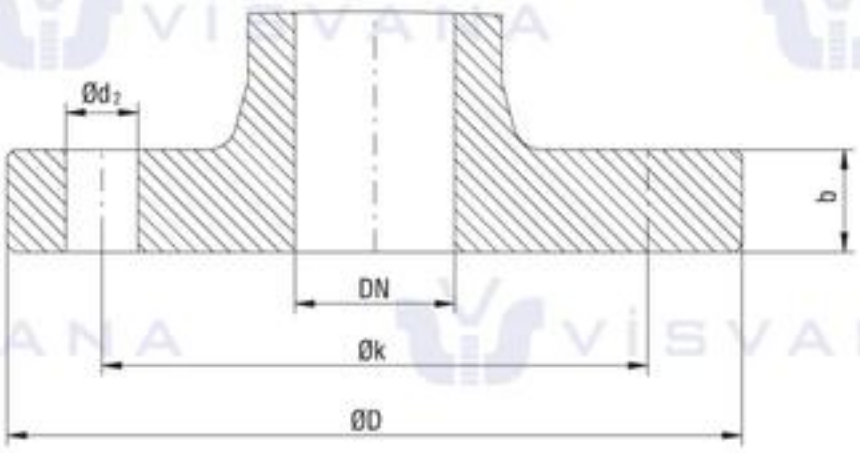

CLASS 125

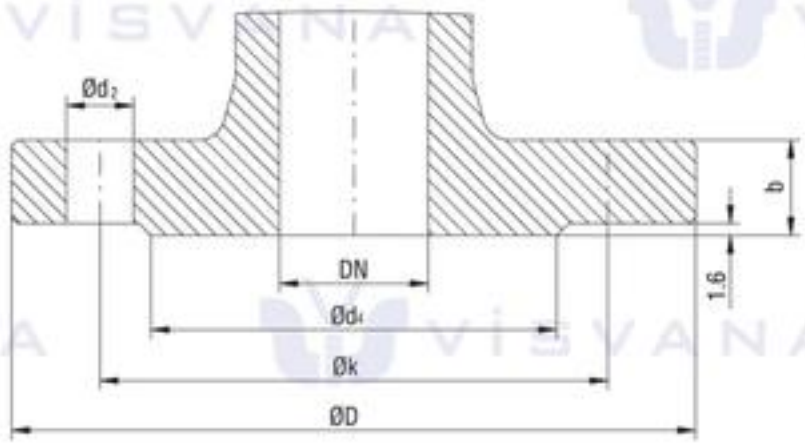

CLASS 150,300,600

	PİK DÖKÜM-CAST IRON				ÇELİK DÖKÜM-CAST STEEL															
	CLASS 125				CLASS 150					CLASS 300					CLASS 600					
DN	D	k	b	d2xn	D	k	d4	b	d2xn	D	k	d4	b	d2xn	D	k	d4	b	d2xn	DN
15	89	60.3	11.1	16x4	89	60.3	35	11.1	16x4	95.3	66.7	35	14.3	16x4	95	66.5	35	14.3	16x4	15
20	98.4	70	12.7		98.4	70	43	12.7		117.5	82.6	43	15.9	19x4	117	82.5	43	15.9	19x4	20
25	108	79.4	11.1		108	79.4	51	14.3		123.8	88.9	51	17.5		124	89.0	51	17.5		25
32	117	88.9	12.7		117.5	89	64	15.9		133.4	98.4	64	19.1		133	98.5	64	20.7		32
40	127	98.4	14.3		127	98.4	73	17.5		155.6	114.3	73	20.7	22x4	150	114.5	73	22.3	22x4	40
50	152.4	120.7	15.9	19x4	152.4	120.7	92	19.1	19x4	165	127	92	22.3	19x8	165	127	92	25.4	19x8	50
65	177.8	139.7	17.5		177.8	139.7	105	22.3		190.5	149.3	105	25.4	22x8	190.5	149.4	105	28.6	22x8	65
80	190.5	152.4	19.1		190.5	152.4	127	23.9		209.5	168.3	127	28.6		209.5	168	127	31.8		80
100	228.6	190.5	23.9	19x8	228.6	190.5	157		19x8	254	200	157	31.8		273	216	157	38.1	25x8	100
125	254	216		22x8	254	216	186		22x8	279.5	235	186	35.0		330	266.7	186	44.5	29x8	125
150	279.4	241.3	25.4		279.4	241.3	216	25.4		318	269.7	216	36.6	22x12	355.6	292	216	47.7	29x12	150
200	343	298.5	28.6		343	298.5	270	28.6		381	330	270	41.3	25x12	419	349.2	270	55.6	32x12	200
250	406.4	362	30.2	25x12	406.4	362	324	30.2	25x12	445	387.4	324	47.7	29x16	508	431.8	324	63.5	35x16	250
300	482.6	431.8	31.8		482.6	431.8	381	31.8		521	451	381	50.8	32x16	559	489	381	66.7	35x20	300
350	533.4	476.3	35.0	29x12	533.4	476.3	413	35.0	29x12	585	514.5	413	54.0	32x20	603.3	527	413	69.9	38x20	350
400	597	539.8	36.6	29x16	597	539.8	470	36.6	29x16	648	571.5	470	57.2	35x20	686	603.2	470	76.2	41x20	400
450	635	577.9	39.7	32x16	635	578	533	39.7	32x16	711	628.6	533	60.4	35x24	743	654	533	82.6	45x20	450
500	698.5	635	42.9	32x20	698.5	635	584	42.9	32x20	775	685.8	584	63.5		813	724	584	88.9	45x24	500
600	813	749.3	47.7	35x20	812.8	749.3	692	47.7	35x20	914.5	812.8	692	69.9	41x24	940	838.2	692	101.6	51x24	600

GASKET & BOLT DIMENSIONS
(For DIN 2501 Flange)
CONTA & CIVATA ÖLÇÜLERİ
DIN 2501 Flanş Normu için)

GASKET - DIN 2690
CONTA - DIN 2690

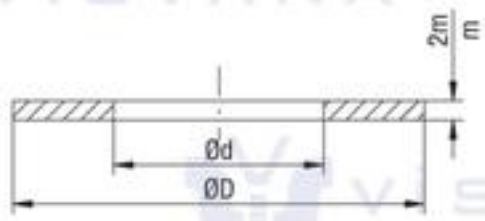

PN		DN																	
		10	15	20	25	32	40	50	65	80	100	125	150	200	250	300	350	400	500
6	Ød	18	22	28	35	43	49	61	77	90	115	141	169	220	274	325	368	420	520
	ØD	38	43	53	63	75	85	95	115	132	152	182	207	262	318	373	423	473	578
10	Ød	18	22	28	35	43	49	61	77	90	115	141	169	220	274	325	368	420	520
	ØD	45	50	60	70	82	92	107	127	142	162	192	218	273	328	378	438	490	595
16	Ød	18	22	28	35	43	49	61	77	90	115	141	169	220	274	325	368	420	520
	ØD	45	50	60	70	82	92	107	127	142	162	192	218	273	330	385	445	497	618
25	Ød	18	22	28	35	43	49	61	77	90	115	141	169	220	274	325	368	420	520
	ØD	45	50	60	70	82	92	107	127	142	168	195	225	285	342	402	458	515	625
40	Ød	18	22	28	35	43	49	61	77	90	115	141	169	220	274	325	368	420	520
	ØD	45	50	60	70	82	92	107	127	142	168	195	225	292	353	418	475	547	628

BOLT DIMENSION (For DIN 2501 Flange)
CIVATA ÖLÇÜLERİ (DIN 2501 Flanş Normu için)

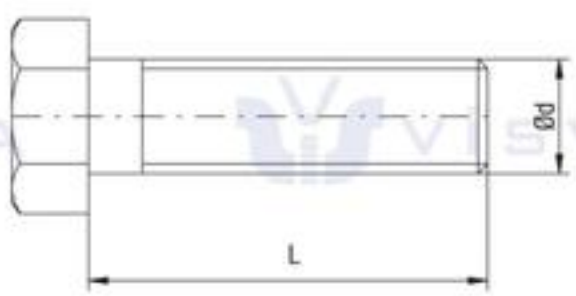

PN		DN																	
		10	15	20	25	32	40	50	65	80	100	125	150	200	250	300	350	400	500
6	ØM	M10				M12				M16						M20			
	L	35		40		45				50		55		60	65	70			
10	ØM	M12				M16							M20					M24	
	L	45		50				55		60		65		70	75			80	85
16	ØM	M12				M16							M20		M24			M27	M30
	L	45		50				55		60		65		70	80	85	90	95	100
25	ØM	M12				M16					M20	M24			M27		M30		
	L	50				55		60	65		70	80	85		95	100	110	120	130
40	ØM	M12				M16					M20	M24		M27	M30		M33	M36	M39
	L	50				55		60	65		70	80	85	100	110	120	130	140	150

TEST PRESSURE
TEST BASINÇLARI

DIN ve TS Normu Vanaların Test Basıncları / DIN and TSE Valves Test Pressures

	SÜRGÜLÜ VANA - GATE VALVE TS 457/4 - DIN 3352/2-F4 PN 6		Test Norm TS 457 / DIN 3230
DN	SÜRGÜ / WEDGE Bar	GÖVDE / BODY Bar	Flanş Bağlantısı Flange Dimensions
40 - 300	4	6	PN 6
	SÜRGÜLÜ VANA - GATE VALVE TS 457/1 - DIN 3352/2-F4 - Non Rising TS 457/2a - DIN 3352/3-F4 - Rising Stem		Test Norm TS 457 DIN 3230
DN	SÜRGÜ Bar	GÖVDE Bar	Flanş Bağlantısı Flange Dimensions
40 - 150	10	16	PN 10
200 - 300	6	10	PN 10
350 - 500	4	6	PN 10
600 - 700	2.5	4	PN 10
	SÜRGÜLÜ VANA - GATE VALVE TS 457/1a - DIN 3352/2-F5 - Non Rising TS 457/2 - DIN 3352/3-F5 - Rising Stem		Test Norm TS 457 DIN 3230
DN	SÜRGÜ / WEDGE Bar	GÖVDE / BODY Bar	Flanş Bağlantısı Flange Dimensions
40 - 600	10	16	PN 10
40 - 600	16	24	PN 16
	ÇALPARA ÇEK VALF - SWING CHECK VALVE TSEK - DIN 3202/2-F6		Test Norm DIN 3230
DN	KLAPE / DISC Bar	GÖVDE / BODY Bar	Flanş Bağlantısı Flange Dimensions
40 - 200	16	24	PN 16
250 - 300	10	16	PN 10
350 - 500	8	12	PN 10
	BUHAR VANASI - GLOBE VALVES DIN 3356/F1-F32 Kumandalı Çek Valf-Stop Check Valve(SDNR) - TS 10 873/DIN 86 252/A-B Buhar Çek Valfi - Lift Check Valves-TS 10 873/DIN 3202/2-F1-F32		Test Norm TS 10 873 DIN 3230
DN	KLAPE / DISC Bar	GÖVDE / BODY Bar	Flanş Bağlantısı Flange Dimensions
15 - 150	16	24	PN 16
200 - 300	10	16	PN 10
350 - 400	6	10	PN 10
	Y ve T Tipi Pislik Tutucu - Y and T Type Strainers TS 11 494 - DIN 3202/2-F1		Test Norm TS 11 494 / DIN 3230
DN		GÖVDE / BODY Bar	Flanş Bağlantısı Flange Dimensions
15 - 300		10	PN 6
350 - 400		6	PN 6
15 - 300		24	PN 16
350 - 400		16	PN 16
	Küresel Vanalar - Ball Valves TS 3148 / DIN 3357		Test Norm TS 9809 / DIN 3230
DN	KÜRE/BALL Bar	GÖVDE / BODY Bar	Flanş Bağlantısı Flange Dimensions
15 - 300	16	25	PN 16
40 - 100	6	10	PN 6

CLASS NORMU VANALARIN TEST BASINCLARI / TEST PRESSURE OF CLASS VALVES

TEST API 598		150		300		600	
ASTM SPECIFICATION	MATERIAL GROUP NO	GÖVDE SHEEL	BURCLAR SEATS	GÖVDE SHEEL	BURCLAR SEATS	GÖVDE SHEEL	BURCLAR SEATS
ASTM A216-WCB	1.1	30	21.5	77	56.2	154	112.3
ASTM A217-WC	1.5	25	17.9	64	56.2	128	93.6
ASTM A217-WC6	1.9	30	21.8	78	56.9	156	113.8
ASTM A217-WC9	1.10	30	21.8	78	56.9	156	113.8
ASTM A217-C9	1.13	30	21.8	78	56.9	156	113.8
ASTM A351-CF8	2.1	25	17	64	46.8	128	93.6
ASTM A351-CF8M	2.2	25	17.9	64	46.8	128	93.6

Not:Test Basıncları "Bar" dır. Note: Unit of test Pressure is "Bar"

TRAP SELECTION ACTUAL CAPACITY OF TRAP IN CONTINUOUS DISCHARGE (kg/h)

SÜREKLİ BOŞALTIM DURUMUNDA GERÇEK KONDENSTOP KAPASİTESİ (kg/h)

Seri Series	V 880		V 211			V 212 V 882			V 213 V 883			V 214 V 884			V 215			V 216		
Çalışma Fark Basıncı Opperation diff. pressure	5	8	5	8	13	4	8	16	4	8	16	4	8	16	4	8	16	4	8	16
0.25	...	...	140	...	...	300	220	...	800	450	300	1000	800	450	1500	1000	800	3000	2250	1500
0.50	130	...	180	130	...	380	270	130	1000	600	380	1250	1000	600	1800	1250	1000	3600	2800	1800
0.75	150	...	210	150	...	450	320	150	1150	640	450	1600	1150	640	2200	1600	1150	4200	3100	2200
1.00	170	100	235	170	100	500	350	170	1250	700	500	1750	1250	700	2350	1750	1250	4500	3300	2250
1.50	200	145	275	200	145	610	400	200	1350	850	610	2100	1350	850	2800	2100	1350	5500	4000	2800
2.00	240	175	320	240	175	750	480	240	1550	1000	750	2500	1550	1000	3500	2500	1550	6500	4800	3500
3.00	270	215	380	270	215	830	580	270	1900	1150	830	2800	1900	1150	4000	2800	1900	7900	5800	4000
4.00	320	240	440	320	240	950	650	320	2150	1350	950	3400	2150	1350	4500	3400	2150	9000	6500	4500
5.00	350	260	480	350	260	...	700	350	...	1500	1100	...	2500	1500	...	3700	2500	...	7000	5000
6.00	...	280	...	380	280	...	800	380	...	1650	1150	...	2750	1650	...	4250	2750	...	7800	5500
7.00	...	300	...	400	300	...	850	400	...	1700	1200	...	2800	1700	...	4500	2800	...	8000	5800
8.00	...	340	...	450	340	...	900	450	...	1750	1300	...	3100	1750	...	5000	3100	...	9000	6400
10.00	...	...	...	...	360	...	...	490	...	...	1400	...	...	2100	...	...	3600	...	...	7000
13.00	...	...	...	...	400	...	...	550	...	...	1600	...	...	2400	...	...	4200	...	...	8000
16.00	...	...	...	...	...	...	...	600	...	...	1700	...	...	2500	...	...	4500	...	...	9000

ÖZEL OPERASYONLARDA KONDENSTOPLARIN ÇALIŞMA KARAKTERİSTİKLERİ

OPERATING CHARACTERISTIC OF VARIOUS STEAM TRAPS IN SPECIFIC CONDITIONS

Çalışma Kabiliyetleri	Ters Kovalı Tip Inverted Bucket Type	Şamandıralı Tip Float Type	Termodinamik Tip Thermodynamic Type
Çalışma Şekli Method of operation	Aralıklı Intermittent	Sürekli Continions	Aralıklı Intermittent
Enerji Tasarrufu Energy Conservation	M	i	
Aşınma Direnci Resistance to wear	M	i	
Korozyon Direnci Corrosion Resistance	M	i	
Hidrolik Şok Direnci Resistance to hydrolic shock	M		
Buhar Sıcaklığında Co2 ve Hava tahliyesi Vents air and Co2 at steam temperature	Evet Yes	Hayır No	Hayır No
Çok Düşük Basınçta Hava Tahliye Kabiliyeti Ability to vent air at very low pressure	Z		
Karşı Basınçta Çalışma Operation against back pressure	M		
Donmaya Karşı Direnç Resistance against freezing	i		i
Temizlenebilme Ability to purpe system	M	O	
Çok düşük güçlerdeki performans Performance on very light loads	M		

M	Mükemmel Excellent	i	İyi Good	O	Orta Fair	Z	Zayıf Poor

MATERIALS OF CLASS NORM VALVES -1-

CLASS NORMU VANA MALZEMELERİ -1-

FERROUS CAST MATERIALS
ÇELİK DÖKÜM MALZEMELER

Material / Malzeme		304 SS	316 SS	ALLOY-20
ASTM Specification		A 351 GR. CF8 A 296 GR. CF8	A 351 GR. CF8M A 296 GR. CF3M	A 351 GR.CN7M A 296 GR.CN7M
Carbon / Karbon C max.	%	0.08	0.08	0.07
Manganese / Manganez Mn	%	1.5	1.5	1.5
Phosporus / Fosfor P max.	%	0.04	0.04	0.04
Sulphur / Sülfür S max.	%	0.04	0.04	0.04
Silicon / Silikon Si max.	%	2.0	1.5	1.5
Cromium / Krom Cr max.	%	18.0 -21.0	18.0 -21.0	19.0 - 21.0
Molybdenum / Molibden Mo	%	-	2.0 - 3.0	2.0 - 3.0
Nicel / Nikel Ni	%	8.0 - 11.0	9.0 - 12.0	27.5 - 30.5
OTHERS				Cu-3.0 to 4.0
Tensile Strength MPA Min.		485	485	425
Yield Strength MPA Min.		205	205	170
Elongation in 2" % Min.		35	30	35
Reduction of area Min.	%	-	-	-
Usage		Body / Gövde	Body / Gövde	Body / Gövde
		Bonnet / Kapak	Bonnet / Kapak	Bonnet / Kapak
		Wedge / Sürgü	Wedge / Sürgü	Wedge / Sürgü
		Yokes / Çatal	Disc / Klape	Disc / Klape
		Gin fln. / Gin flanşı	Seats / Burclar	Seats / Burclar
		Seats / Burclar		
		Disc / Klape		

FERROUS WROUGHT MATERIALS
DÖVME ÇELİK MALZEMELER

CARBON STEEL	13 % Cr	304 SS	316 SS	410 SS
A 105 GR. II	A 182 GR. F 6a	A 182 GR. F 304	A 182 GR. F 316	A 276 GR. 410
0.22 - 0.35	0.15	0.08	0.08	0.15
0.60-1.05	1.00	2.00	2.00	1.00
0.04	0.04	0.04	0.04	0.04
0.05	0.03	0.03	0.03	0.03
0.35	1.00	1.00	1.00	1.00
	11.5-13.5 max.	18.0 -20.0	16.0 -18.0	11.5-13.5
			2.00 - 3.00	
-	0.5 max.	8.0 - 11.0	10.0 - 14.0	
485	760	515	515	760
250	585	205	205	535
22	15	30	30	22
30	35	50	50	35
Gin fln. / Gin flanşı	Stem / Mil	Stem / Mil	Stem / Mil	Stem / Mil
Eye bolts / Halka cv.	Eye bolts / Halka cv.	Eye bolts / Halka cv.	Eye bolts / Halka cv.	Eye bolts / Halka cv.
Seats / Burclar	Seats / Burclar	Seats / Burclar	Seats / Burclar	Seats / Burclar
Body / Gövde	Wedge / Sürgü	Wedge / Sürgü	Wedge / Sürgü	Disc / Klape
Bonnet / Kapak				

MATERIAL COMPARISONS / MALZEME KARŞILAŞTIRMASI

GENERAL CLASSIFICATION		ASTM	BS	DIN
Cast / Döküm	Carbon Steel/ Karbon Çeliği	A 216 - WCB	BS 1504 - 161B	17 245 - GS-C 25
Cast Alloy Steel Döküm Alaşım Çeliği	Carbon Mo Steel	A 217 - WC1	BS 1398 - a	17 245 - GS 22 Mo 4
	1 1/4 % Cr - Mo Steel	A 217 - WC6	BS 1398 - B	17 245 - GS 17 Cr Mo
	2 1/4 % Cr - Mo Steel	A 217 - WC9	BS 1398 - C	GS 12 Cr Mo9.10
	4 - 6 % Cr Steel	A 217 - C5	BS 1462	GS 12 Cr Mo19.5
Cast Austenitic Steel	18 - 8 CrNi	A 351 CF8	BS 1504 - 801	G-X6CrNi 18.9
	18 - 8 CrNi,Mo	A 351 CF8M	BS 1504 - 845	G-X5CrNiMo 18.10
Ferrous Wrought Mat.	Carbon Steel	A 105	BS 1503 - 161	17 200 C22N
	13 Cr	A 182 - F6	BS 1503 - 713	X 10 Cr 13
	18/8 Cr Ni	A 182 - F304	BS 1503 - 801	X 5 Cr Ni 18.9
	18/8 Cr Ni Mo	A 182 - F316	BS 1503 - 845B	X 5 Cr Ni Mo18.10
Bolting - Nut Civata/Somun	Cr Mo	A 197 - B7	BS 1750 - B7	17 200 42 CrMo4
	18/8 Cr Ni	A 193 - B8	BS 1750 - B8	X 5 Cr Ni 18.9
	Carbon Steel	A 307	BS 970.En3	267
		A 194 - 2H	BS 1750 - 2H	17 240 C45

MATERIALS OF CLASS NORM VALVES -2-

CLASS NORMU VANA MALZEMELERİ -2-

MATERIAL / MALZEMELER

FERROUS CAST MATERIALS / ÇELİK DÖKÜM MALZEMELER

Material / Malzeme		Carbon Steel	Carbon Moly. Steel	1 1/4 %Cr-Mo Steel	2 1/4 % Cr Mo. Steel	4-6 % Cr Steel	13 % Cr Steel
ASTM Specification		A 216 GR. WCB	A 217 GR. WC1	A 217 GR. WC6	A 217 GR. WC9	A 217 GR. C5	A 351 GR. CA 15
Carbon / Karbon C max.	%	0.30	0.25	0.20	0.18	0.20	0.15
Manganese / Manganez Mn	%	1.0 Max	0.50-0.80	0.50-0.80	0.40-0.70	0.40-0.70	1.0
Phosporus / Fosfor P max.	%	0.04	0.04	0.04	0.04	0.04	0.04
Sulphur / Sülfür S max.	%	0.045	0.045	0.045	0.045	0.045	0.04
Silicon / Silikon Si max	%	0.60	0.60	0.60	0.60	0.75	1.5
Cromium / Krom Cr max.	%	-	-	1.0-1.5	2.0-2.75	4.0-6.5	11.5-14.0
Molybdenum / Molibden Mo	%	-	0.45-0.65	0.45-0.65	0.9-1.2	0.45-0.65	
Nicel / Nikel Ni	%	-	-	-	-	-	1.0 Max.
Tensile Strength MPA Min.		485 - 655	450 - 620	485 - 655	485 - 655	620 - 795	620 - 795
Yield Strength MPA Min.		250	240	275	275	415	450
Elongation in 2" % Min.		22	24	20	20	18	18
Reduction of area Min.	%	35	35	35	35	35	30
Usage		Body / Gövde	Body / Gövde	Body / Gövde	Body / Gövde	Body / Gövde	Body / Gövde
		Bonnet / Kapak	Bonnet / Kapak	Bonnet / Kapak	Bonnet / Kapak	Bonnet / Kapak	Bonnet / Kapak
		Wedge / Sürgü	Wedge / Sürgü	Wedge / Sürgü	Wedge / Sürgü	Wedge / Sürgü	Wedge / Sürgü
		Yokes / Çatal	Disc / Klape	Disc / Klape	Disc / Klape	Disc / Klape	Disc / Klape
		Gln fln. / Gln flanşı					Seats / Burcular
		Disc / Klape					

FOR TRIMING MATERIALS / MİL MALZEMELERİ

Chemical Properties / Kimyasal Analizler

ASTM Std.		13 Cr AISI	13 Cr AISI	18Cr-8Ni A-182	18Cr-8Ni-2Mo A-182	13 Cr A-182
Grade		410	420	F-304	F-316	F6
Carbon / Karbon C %	Max.	0.15	0.15 min.	0.08	0.08	0.15
Silicon / Silikon Si %	Max.	1.00	1.00	1.00	1.00	1.00
Manganese / Manganez Mn %	Max.	1.00	1.00	2.00	2.00	1.00
Phosporus / Fosfor P %	Max.	0.040	0.040	0.040	0.040	0.040
Sulphur / Sülfür S %.	Max.	0.030	0.030	0.030	0.030	0.030
Nicel / Nikel Ni %		-	-	8.0 - 11.0	10.0 - 14.0	0.50 max.
Cromium / Krom Cr %		11.50 - 13.50	12.00 - 14.00	18.0 - 20.0	16.0 -18.0	11.5 -13.5
Molybdenum / Molibden Mo %		-	-	-	2.0 - 3.0	-
Copper / Bakır Cu %		-	-	-	-	-
Iron / Demir Fe %		Bal.	Bal.	Bal.	Bal.	Bal.
Titan / Titan Ti %		-	-	-	-	-

BOLTING FOR BODY BONNET / KAPAK BAĞLANTI CIVATALARI

Material/ Malzeme	Carbon Steel Karbon Çeliği	Alloy Steel Alaşım Çeliği	Alloy Steel Alaşım Çeliği	Stainless Steel Paslanmaz Çelik	Stainless Steel Paslanmaz Çelik
ASTM Specification	A 307 GR. B	A 193 GR. B7	A 193 GR. B16	A 193 GR. B8	A 193 GR. B8M
		2 1/2"&Under	2 1/2"&Under		
Tensile Stregth MPA Min.	415	860	860	515	515
Yield Strength MPA Min.	-	720	720	205	205
Elongation in 2" Min.	18	16	18	30	30
Reduction of area % Min.	-	50	50	50	50

NUTS MATERIALS / SOMUN MALZEMELERİ

ASTM A Specification	A 194 Gr. 2H	A 194 Gr. 2H	A 194 Gr. 7	A 194 Gr. 8	A 194 Gr. 8M

FOUNDRY APPROVALS / DÖKÜMHANE SERTİFİKALARI

Page 1 / 2

Marine & Offshore

Certificate number: SMS.IKE.57463/B.0

www.veritas.com

RECOGNITION FOR

BV MODE II SCHEME

VIS VANA SANAYİ İTHALAT İHRACAT TIC. LTD. STI.
İSTANBUL - Türkiye

Summary of the range of the recognition which is detailed in the subsequent page(s):
Design, production of marine valves & Production of gray casting, spheroidal iron casting, stainless steel casting, steel casting and copper / copper alloys castings for marine valves.

This certificate is issued to attest that Bureau Veritas Marine & Offshore has performed, at the above company's request and in compliance with the requirements of NR320, a satisfactory assessment of the manufacturing facilities and associated quality procedures related to the range of the recognition.

This certificate will expire on: 27 Feb 2027

For BUREAU VERITAS,
At BV İSTANBUL, on 27 Feb 2023,
Gurcan Yilmaz

This certificate was created electronically and is valid without signature

The electronic version is available at: http://www.veritasjim.com/servlet/jsp/viewPublicPdfRecognition.jsp?id=jmrgsqzhlf

BV Mod. Adj2 697 June 2017 — This certificate consists of 2 page(s)

DNV·GL

Certificate No: AMMM00002RK

APPROVAL OF MANUFACTURER CERTIFICATE

This is to certify:
That
VISVANA San. Ith.Ihr.Tic. Ltd. Sti.
Türkoba Mah. Atatürk Cad. No:232/1
Büyükçekmece/İstanbul,
Turkey

is an approved manufacturer of
Copper Alloy Castings

in accordance with
DNV GL rules for classification – Ships

and the following particulars:

Application area	**Castings for valves, fittings and general application**
Alloy type	**Leaded gunmetal**
Manufacturing method	**Sand casting**
Max. weight	**See page 2**
Max. wall thickness	**See page 2**
Heat treatment condition	**As cast**

Manufacturer(s) approved by this certificate is/are accepted to deliver according to DNV GL, DNV and GL rules. Materials to be applied to DNV GL classed object shall fulfill the material requirements in the applicable DNV GL class rules.

Issued at **Hamburg** on **2020-05-08**

This Certificate is valid until **2023-05-07.**
DNV GL local station: **Istanbul**

Approval Engineer: **Christian Wildhagen**

for **DNV GL**

Thorsten Lohmann
Head of Section

DNV·GL

Certificate No: AMMM00002R7

APPROVAL OF MANUFACTURER CERTIFICATE

This is to certify:
That
VIS VANA San. Ith.Ihr.Tic. Ltd. Sti.
Türkoba Mah. Atatürk Cad. No:232/1
Büyükçekmece/İstanbul ,
Turkey

is an approved manufacturer of
Iron Castings

in accordance with
DNV GL rules for classification – Ships

and the following particulars:

Iron type	**Nodular cast iron**
Casting method	**Sand casting**
Max. weight	**See page 2**
Max. wall thickness	**See page 2**
Heat treatment condition	**As cast**

Manufacturer(s) approved by this certificate is/are accepted to deliver according to DNV GL, DNV and GL rules. Materials to be applied to DNV GL classed object shall fulfill the material requirements in the applicable DNV GL class rules.

Issued at **Hamburg** on **2020-04-09**

This Certificate is valid until **2023-04-08.**
DNV GL local station: **Istanbul**

Approval Engineer: **Christian Wildhagen**

for **DNV GL**

Thorsten Lohmann
Head of Section

DNV

Certificate No: AMMM00002YE

APPROVAL OF MANUFACTURER CERTIFICATE

This is to certify:
That
VISVANA San. Ith.Ihr.Tic. Ltd. Sti.
Türkoba Mah. Atatürk Cad. No:232/1
Büyükçekmece/İstanbul
Turkey

is an approved manufacturer of
Steel Castings

in accordance with
DNV rules for classification – Ships

and the following particulars:

Application area	**Stainless steel castings**
Steel type	**Austenitic stainless, See page 2**
Casting method	**Sand casting**
Max. weight	**See page 2**
Max. wall thickness	**See page 2**
Heat treatment condition	**Solution heat treated, See page 2**
Additional approval conditions	**See page 2**

Manufacturer(s) approved by this certificate is/are accepted to deliver according to DNV GL, DNV and GL rules. Materials to be applied to DNV classed object shall fulfill the material requirements in the applicable DNV class rules.

Issued at **Hamburg** on **2022-04-05**

This Certificate is valid until **2025-04-04.**
DNV local station: **Istanbul**

Approval Engineer: **Christian Wildhagen**

for **DNV**

Thorsten Lohmann
Head of Section

FOUNDRY APPROVALS / DÖKÜMHANE SERTİFİKALARI

DNV·GL

APPROVAL OF MANUFACTURER CERTIFICATE

Certificate No: AMMM00002RT

This is to certify:

That

VISVANA San. Ith.Ihr.Tic. Ltd. Sti.
Türkoba Mah. Atatürk Cad. No:232/1
Büyükçekmece/İstanbul
Turkey

is an approved manufacturer of
Steel Castings

in accordance with
DNV GL rules for classification – Ships

and the following particulars:

Application area	**Castings for hull structures and equipment,** **Castings for machinery,** **Castings for boilers, pressure vessels and piping systems**
Steel type	**Carbon and carbon-manganese,** **See page 2**
Casting method	**Sand casting**
Max. weight	**500 kg**
Max. wall thickness	**100 mm**
Heat treatment condition	**See page 2**

Manufacturer(s) approved by this certificate is/are accepted to deliver according to DNV GL, DNV and GL rules. Materials to be applied to DNV GL classed object shall fulfill the material requirements in the applicable DNV GL class rules.

Issued at **Hamburg** on **2020-05-26**

This Certificate is valid until **2023-05-25.**
DNV GL local station: **Istanbul**

Approval Engineer: **Christian Wildhagen**

for **DNV GL**

Thorsten Lohmann
Head of Section

LEGAL DISCLAIMER: Unless otherwise stated in the applicable contract with the holder of this document, or following from mandatory law, the liability of DNV GL AS, its parent companies and subsidiaries as well as their officers, directors and employees ("DNV GL") arising from or in connection with the services rendered for the purpose of the issuance of this document or reliance thereon, whether in contract or in tort (including negligence), shall be limited to direct losses and under any circumstance be limited to 300 000 USD.

Form code: MF 311 Revision: 2020-01 www.dnvgl.com Page 1 of 2

Lloyd's Register

Page 1 of 2
Certificate No: LR00042669R
Issue Date: 05/07/2019
Expiry Date: 02/07/2023

Steel Castings

Manufacturer	**VIS VANA SAN ITH IHR TIC LTD STI**
Address	Türkoba Mh. Atatürk 2 Cad. No 232/1, 34500 Büyükçekmece, İstanbul, Turkey
Type	Steel Castings
Scope of Approval	**Steel Castings.**
	Maximum weight, 500 kg / 0.5 tonnes.
	Weld repairs not permitted.

This approval is subject to compliance with the Rules for the Manufacture, Testing and Certification of Materials. The full details of the processes and grades to which this approval applies are given on subsequent pages of this certificate.

This certificate is issued to the named manufacturer, and is valid until the expiry date specified. Lloyd's Register is to be notified of any change that may affect the validity of this certificate, and reserves the right to cancel or withdraw this certificate.

Atatürk Caddesi, Sitkibey Plaza, No:82 Kat 3 Daire
13, Kozyatağı, İstanbul, Turkey

A. Timurhan Baykekin
Marine Senior Surveyor to Lloyd's Register Gözetim Ltd Şti
A member of the Lloyd's Register Group

Lloyd's Register Group Limited, its affiliates and subsidiaries and their respective officers, employees or agents are, individually and collectively, referred to in this clause as 'Lloyd's Register'. Lloyd's Register assumes no responsibility and shall not be liable to any person for any loss, damage or expense caused by reliance on the information or advice in this document or howsoever provided, unless that person has signed a contract with the relevant Lloyd's Register entity for the provision of this information or advice and in that case any responsibility or liability is exclusively on the terms and conditions set out in that contract.

Lloyd's Register

Page 1 of 2
Certificate No: LR00049979RA
Issue Date: 16/06/2020
Expiry Date: 15/06/2023

Approved Manufacturer of Iron Castings

Manufacturer	**VIS VANA SAN ITH IHR TIC LTD STI**
Address	Türkoba Mh. Atatürk 2 Cad. No 232/1, 34500 Büyükçekmece, İstanbul, Turkey
Type	Iron Castings
Scope of Approval	**Spheroidal Graphite Cast Iron Castings, maximum weight 500 kg / 0.5 tonnes.**

This approval is subject to compliance with the Rules for the Manufacture, Testing and Certification of Materials. The full details of the processes and grades to which this approval applies are given on subsequent pages of this certificate.

This certificate is issued to the named manufacturer, and is valid until the expiry date specified. Lloyd's Register is to be notified of any change that may affect the validity of this certificate, and reserves the right to cancel or withdraw this certificate.

Atatürk Caddesi, Sitkibey Plaza, No:82 Kat 3 Daire
13, Kozyatağı, İstanbul, Turkey

A. Timurhan Baykekin
Marine Senior Surveyor to Lloyd's Register Gözetim Ltd Şti
A member of the Lloyd's Register Group

Lloyd's Register Group Limited, its affiliates and subsidiaries and their respective officers, employees or agents are, individually and collectively, referred to in this clause as 'Lloyd's Register'. Lloyd's Register assumes no responsibility and shall not be liable to any person for any loss, damage or expense caused by reliance on the information or advice in this document or howsoever provided, unless that person has signed a contract with the relevant Lloyd's Register entity for the provision of this information or advice and in that case any responsibility or liability is exclusively on the terms and conditions set out in that contract.

Lloyd's Register

Page 1 of 2
Certificate No: LR00049779RA
Issue Date: 10/07/2020
Expiry Date: 09/07/2023

Copper Alloy Castings For Valves, Liners, Bushes And Fittings

Manufacturer	**VIS VANA SAN ITH IHR TIC LTD STI**
Address	Türkoba Mh. Atatürk 2 Cad. No 232/1, 34500 Büyükçekmece, İstanbul, Turkey
Type	Copper Alloy Castings for Valves, Liners, Bushes and Fittings
Scope of Approval	**Copper Alloy Castings for Valves, Liners, Bushes and Fittings.**
	Long Freezing Range Alloys
	Leaded Gunmetal:
	CuSn5Zn5Pb5, CuSn7Zn2Pb3, CuSn7Zn4Pb7, CuSn6Zn4Pb2
	Maximum weight, 0.5 tonnes.
	Weld repairs not permitted.

This approval is subject to compliance with the Rules for the Manufacture, Testing and Certification of Materials. The full details of the processes and grades to which this approval applies are given on subsequent pages of this certificate.

This certificate is issued to the named manufacturer, and is valid until the expiry date specified. Lloyd's Register is to be notified of any change that may affect the validity of this certificate, and reserves the right to cancel or withdraw this certificate.

Atatürk Caddesi, Sitkibey Plaza, No:82 Kat 3 Daire
13, Kozyatağı, İstanbul, Turkey

A. Timurhan Baykekin
Marine Senior Surveyor to Lloyd's Register Gözetim Ltd Şti
A member of the Lloyd's Register group

Lloyd's Register Group Limited, its affiliates and subsidiaries and their respective officers, employees or agents are, individually and collectively, referred to in this clause as 'Lloyd's Register'. Lloyd's Register assumes no responsibility and shall not be liable to any person for any loss, damage or expense caused by reliance on the information or advice in this document or howsoever provided, unless that person has signed a contract with the relevant Lloyd's Register entity for the provision of this information or advice and in that case any responsibility or liability is exclusively on the terms and conditions set out in that contract.

CERTIFICATES / SERTİFİKALAR

NAVIGA CERTIFICATION

SERTİFİKA
CERTIFICATE OF REGISTRATION

Bu sertifika aşağıdaki kuruluşa
This certificate has been awarded to the company

VİS VANA SANAYİ İTHALAT VE İHRACAT TİCARET LİMİTED ŞİRKETİ

Türkoba Mah. Atatürk 2.Cad No:232/B 34537 Büyükçekmece, İSTANBUL

Uygulanmakta olan Kalite yönetim sisteminin
To certify that the implemented Quality management system complies with

ISO 9001:2015

Standardına uygunluğunu belgelendirmek amaci ile aşağıdaki kapsamda verilmiştir.
For the activities described below

ENDÜSTRİYEL VANALARIN TASARIMI, ÜRETİMİ, SATIŞI VE SATIŞ SONRASI SERVİS FAALİYETLERİ & VANALAR İÇİN GRİ DÖKME DEMİR, KÜRESEL GRAFİTLİ DÖKME DEMİR, ÇELİK DÖKÜM, PASLANMAZ ÇELİK DÖKÜM VE BAKIR ALAŞIMLI MALZEMELERİN DÖKÜMÜ

DESIGN, PRODUCTION, SALES AND AFTER-SALES SERVICE ACTIVITIES OF INDUSTRIAL VALVES PRODUCTION OF GRAY CASTING, SPHEROIDAL CASTING, STEEL CASTING, STAINLESS STEEL CASTING AND COPPER ALLOYS CASTINGS FOR INDUSTRIAL AND MARINE VALVES

Sertifika No. / *Certificate No.*: 2140003
İlk Belgelendirme Tarihi / *Initial Certification Date*: 07.01.2021
Sertifika Tarihi / *Date of Certificate*: 23.01.2023
Bitiş Tarihi / *Expiry Date*: 06.01.2024
Belgelendirme Periyodu / *Certification Period*: 3 Yıl / *Years*

İstanbul, 23.01.2023 (Rev.02)

TÜRKAK BELGE NO
*TS-68FD-BD13

IAF TÜRKAK

NAVIGA ULUSLARARASI BELGELENDİRME VE EĞİTİM HİZMETLERİ LTD. ŞTİ.
Yenibosna Merkez Mah. 29 Ekim Cad. No:35 Kat:3 Bahçelievler/İSTANBUL
Tel: 0212 482 9606 Fax: 0212 482 9424 www.navigacert.com

TÜV NORD

CERTIFICATE

Conformity based on Full Quality Assurance
according to directive 2014/68/EU Annex III Module H

Certificate No.: 08-302-2284117726-C-2020-1

Name and address of bearer: VİS VANA SANAYİ İTH. İHR. TİC. LTD. ŞTİ.
Türkoba Köyü Atatürk Cad. No:232/1
Büyükçekmece/İSTANBUL/TÜRKİYE

We hereby certify that the manufacturer has established a quality assurance system for the manufacturing of pressure equipment according to directive 2014/68/EU. The manufacturer is entitled to mark the pressure equipment produced within the range of the quality system with the following mark:

CE 2354

Tested according to 2014/68/EU:	Conformity based on Full Quality Assurance (module H)
Test report No.:	PED 07 T 22841177261
Range of products:	Design and production of Ball Valves, Globe Valves, Gate Valves, Check Valves, Butterfly Valves, Plug Valves, Needle Valves and Strainers
Place of manufacture:	Türkoba Köyü Atatürk Cad. No:232/1 Büyükçekmece/İSTANBUL/TÜRKİYE
valid until:	30.10.2023

Istanbul, 04.11.2020

Certifier for Pressure Equipment of
TÜV Teknik Kontrol ve Belgelendirme A.Ş.

Mr. Tuncer SOYUTEMİZ
Notified Body 2354

TÜV Teknik Kontrol ve Belgelendirme A.Ş.
Gayrettepe Mah. Pazar sok. Barali İş Merkezi No:4 Kat 4, 34349 Beşiktaş, İstanbul
Tel.: 0 212 286 28 42 Fax: 0 212 283 38 44 E-mail: tuv-nord@tuv-turkey.com Web: www.tuv-turkey.com
İstanbul Ticaret Sicil No: 321512 Mersis No: 0-7360-0080-2500013 Mecburiyetli V.D. 736 000 0025

F-722448

Certificate of Authority to use the Official API Monogram
License Number: 6D-1378 ORIGINAL

The American Petroleum Institute hereby grants to
VIS VANA SANAYI ITHALAT VE IHRACAT TICARET LIMITED SIRKETI
Turkoba Mahallasi Ataturk Caddesi No: 232 Tepecik
Istanbul, Buyukcekmece
Turkey

the right to use the Official API Monogram® on manufactured products under the conditions in the official publications of the American Petroleum Institute entitled API Spec Q1® and **API-6D** and in accordance with the provisions of the License Agreement.

In all cases where the Official API Monogram is applied, the API Monogram shall be used in conjunction with this certificate number: **6D-1378**

The American Petroleum Institute reserves the right to revoke this authorization to use the Official API Monogram for any reason satisfactory to the Board of Directors of the American Petroleum Institute.

The scope of this license includes the following: Check Valves, Ball Valves, Plug Valves and Gate Valves

QMS Exclusions: No Exclusions Identified as Applicable

Effective Date: JUNE 1, 2021
Expiration Date: JUNE 1, 2024

To verify the authenticity of this license, go to www.api.org/compositelist.

American Petroleum Institute

CERTIFICATES / SERTİFİKALAR

NAVIGA CERTIFICATION

SERTİFİKA
CERTIFICATE OF REGISTRATION

Bu sertifika aşağıdaki kuruluşa
This certificate has been awarded to the company

VİS VANA SANAYİ İTHALAT VE İHRACAT TİCARET LİMİTED ŞİRKETİ

Türkoba Mah. Atatürk 2.Cad No:232/B 34537 Büyükçekmece, İSTANBUL

Uygulanmakta olan İş Sağlığı ve Güvenliği yönetim sisteminin
To certify that the implemented Occupational Health And Safety management system complies with

ISO 45001:2018

Standardına uygunluğunu belgelendirmek amacı ile aşağıdaki kapsamda verilmiştir.
For the activities described below

ENDÜSTRİYEL VANALARIN TASARIMI, ÜRETİMİ, SATEŞI VE SATIŞ SONRASI SERVİS FAALİYETLERİ & VANALAR İÇİN GRİ DÖKME DEMİR, KÜRESEL GRAFİTLİ DÖKME DEMİR, ÇELİK DÖKÜM,PASLANMAZ ÇELİK DÖKÜM VE BAKIR ALAŞIMLI MALZEMELERİN DÖKÜMÜ

DESIGN, PRODUCTION, SALES AND AFTER-SALES SERVICE ACTIVITIES OF INDUSTRIAL VALVES PRODUCTION OF GRAY CASTING, SPHERODIAL CASTING, STEEL CASTING, STAINLESS STEEL CASTING AND COPPER ALLOYS CASTINGS FOR INDUSTRIAL AND MARINE VALVES

Sertifika No. / *Certificate No.*: 2144007
İlk Belgelendirme Tarihi / *Initial Certification Date*: 07.01.2021
Sertifika Tarihi / *Date of Certificate*: 23.01.2023
Bitiş Tarihi / *Expiry Date*: 06.01.2024
Belgelendirme Periyodu / *Certification Period*: 3 Yıl / *Years*

İstanbul, 23.01.2023 (Rev.02)

NAVIGA ULUSLARARASI BELGELENDİRME VE EĞİTİM HİZMETLERİ LTD. ŞTİ.

NAVIGA CERTIFICATION

SERTİFİKA
CERTIFICATE OF REGISTRATION

Bu sertifika aşağıdaki kuruluşa
This certificate has been awarded to the company

VİS VANA SANAYİ İTHALAT VE İHRACAT TİCARET LİMİTED ŞİRKETİ

Türkoba Mah. Atatürk 2.Cad No:232/B 34537 Büyükçekmece, İSTANBUL

Uygulanmakta olan Çevre yönetim sisteminin
To certify that the implemented Environmental management system complies with

ISO 14001:2015

Standardına uygunluğunu belgelendirmek amacı ile aşağıdaki kapsamda verilmiştir.
For the activities described below

ENDÜSTRİYEL VANALARIN TASARIMI, ÜRETİMİ, SATIŞI VE SATIŞ SONRASI SERVİS FAALİYETLERİ & VANALAR İÇİN GRİ DÖKME DEMİR, KÜRESEL GRAFİTLİ DÖKME DEMİR, ÇELİK DÖKÜM, PASLANMAZ ÇELİK DÖKÜM VE BAKIR ALAŞIMLI MALZEMELERİN DÖKÜMÜ

DESIGN, PRODUCTION, SALES AND AFTER-SALES SERVICE ACTIVITIES OF INDUSTRIAL VALVES PRODUCTION OF GRAY CASTING, SPHERODIAL CASTING, STEEL CASTING, STAINLESS STEEL CASTING AND COPPER ALLOYS CASTINGS FOR INDUSTRIAL AND MARINE VALVES

Sertifika No. / *Certificate No.*: 2143004
İlk Belgelendirme Tarihi / *Initial Certification Date*: 07.01.2021
Sertifika Tarihi / *Date of Certificate*: 23.01.2023
Bitiş Tarihi / *Expiry Date*: 06.01.2024
Belgelendirme Periyodu / *Certification Period*: 3 Yıl / *Years*

İstanbul, 23.01.2023 (Rev.02)

NAVIGA ULUSLARARASI BELGELENDİRME VE EĞİTİM HİZMETLERİ LTD. ŞTİ.

TCS CERTIFICATE

VİS VANA SAN. İTH. VE İHR. TIC. LTD. ŞTİ.

Kalifikasyon Aralığı / *Qualification Range*

BALL VALVES DN 15 (1/2") to DN 400 (16")
PN 16, PN 16, PN 20 (CLASS 150 L), PN 25, PN 40 (CLASS 300)
GATE VALVES DN 15 (1/2") to DN 600 (24")
PN 16, PN 16, PN 20 (CLASS 150 L), PN 25, PN 40 (CLASS 300)

Ekler / *Annex*

Rapor No/Report No: TCS180925-VİS01
Rapor No/Report No: TCS180925-VİS02
Rapor No/Report No: TCS180925-VİS03
Rapor No/Report No: TCS180925-VİS04
Rapor No/Report No: TCS180925-VİS05
Rapor No/Report No: TCS180925-VİS06

Test Sonucu / *Test Result* **Sertifiye Edilmiştir** / *Uygun Bulunmuştur*

Sertifika No / Certificate No: MU_19001-TR
Proje No / Project No: TR_MU_18_033_00

Kullanım / *Use*: Genel / *General*
Test Tarihi / *Test Date*: 28.09.2018 / 29.09.2018
Test Standardı / *Test Standard*: API 6FA, API 607 and ISO 10497
Test Yeri / *Test Place*: Büyükçekmece / İSTANBUL / TÜRKİYE
Üretim Yılı / *Year of Manufacture*: 2018
Tarih / *Date*

CERTIFICATES / SERTİFİKALAR

TÜRK STANDARDLARI ENSTİTÜSÜ
TÜRK STANDARDLARINA UYGUNLUK BELGESİ
TURKISH STANDARDS INSTITUTION
CERTIFICATE OF CONFORMITY TO TURKISH STANDARDS

BELGE NUMARASI / REFERENCE NUMBER OF LICENCE	024289-TSE-03/03
BELGENİN İLK VERİLİŞ TARİHİ / DATE OF FIRST ISSUE OF LICENCE	08.03.2011
BELGENİN SON GEÇERLİLİK TARİHİ / LICENCE VALID UNTIL	11.11.2023
BELGE SAHİBİ KURULUŞUN ADI / NAME OF THE LICENCE HOLDER	VIS VANA SANAYİ İTHALAT VE İHRACAT TİCARET LİMİTED ŞİRKETİ
BELGE SAHİBİ KURULUŞUN ADRESİ / ADRESS OF THE LICENCE HOLDER	SÜMERevLER BARKA SOK.NO:35 EYÜP İSTANBUL/TÜRKİYE
ÜRETİM YERİ ADI / NAME OF THE MANUFACTURING PLACE	VIS VANA SANAYİ İTHALAT VE İHRACAT TİCARET LİMİTED ŞİRKETİ
ÜRETİM YERİ ADRESİ / ADRESS OF THE MANUFACTURING PLACE	TÜRKOBA KÖYÜ NO:47 TEPECİK BÜYÜKÇEKMECE İSTANBUL / TÜRKİYE
İPTAL EDİLEN BELGE NUMARASI (Varsa) / INDICATION OF SUPERSEDED LICENCE (if any)	024289-TSE-03/02
TESCİLLİ TİCARİ MARKASI / REGISTERED TRADE MARK	ŞEKİL+VİS VANA SAN.İTHALAT İHRACAT TİC.LTD.ŞTİ.
İLGİLİ TÜRK STANDARDI / RELATED TURKISH STANDARD	TS 10873 / 28.04.2009
BELGE KAPSAMI / SCOPE OF LICENCE	

* ÇEK VANALAR - BAKIR ALAŞIMLI (Cu-Zn) MALZEMEDEN, PN6 (DAHİL)'DEN PN40 (DAHİL)'E KADAR ANMA BASINÇLI, DN15 (DAHİL)DEN DN 300 (DAHİL)'E KADAR ANMA ÇAPLI GERİ TEPMESİ KONTROLLÜ VE KONTROLSÜZ. (FÖY 1-2-3-4) 1, 2 VE 3 KALİTE SINIF DÖZ (FÖY 1-3) KÖŞE (FÖY 2-4) TIP OLANLAR

02.11.2022
Belgelendirme Merkezi Başkanı Adına
MERİÇ KARACAN
TSE İSTANBUL BELGELENDİRME MÜDÜRÜ

TÜRK STANDARDLARI ENSTİTÜSÜ
TÜRK STANDARDLARINA UYGUNLUK BELGESİ
TURKISH STANDARDS INSTITUTION
CERTIFICATE OF CONFORMITY TO TURKISH STANDARDS

BELGE NUMARASI / REFERENCE NUMBER OF LICENCE	024289-TSE-04/01
BELGENİN İLK VERİLİŞ TARİHİ / DATE OF FIRST ISSUE OF LICENCE	13.02.2014
BELGENİN SON GEÇERLİLİK TARİHİ / LICENCE VALID UNTIL	11.11.2023
BELGE SAHİBİ KURULUŞUN ADI / NAME OF THE LICENCE HOLDER	VIS VANA SANAYİ İTHALAT VE İHRACAT TİCARET LİMİTED ŞİRKETİ
BELGE SAHİBİ KURULUŞUN ADRESİ / ADRESS OF THE LICENCE HOLDER	SÜMERevLER BARKA SOK.NO:35 EYÜP İSTANBUL/TÜRKİYE
ÜRETİM YERİ ADI / NAME OF THE MANUFACTURING PLACE	VIS VANA SANAYİ İTHALAT VE İHRACAT TİCARET LİMİTED ŞİRKETİ
ÜRETİM YERİ ADRESİ / ADRESS OF THE MANUFACTURING PLACE	TÜRKOBA KÖYÜ NO:47 TEPECİK BÜYÜKÇEKMECE İSTANBUL / TÜRKİYE
İPTAL EDİLEN BELGE NUMARASI (Varsa) / INDICATION OF SUPERSEDED LICENCE (if any)	14-2.30-4.34-09/TSE-65536
TESCİLLİ TİCARİ MARKASI / REGISTERED TRADE MARK	ŞEKİL+VİSVANA San.İthalat İhracat Tic.Ltd. Şti.
İLGİLİ TÜRK STANDARDI / RELATED TURKISH STANDARD	TS 3148 / 28.04.2009
BELGE KAPSAMI / SCOPE OF LICENCE	

*KÜRESEL VANALAR – DÖKME DEMİRDEN- GENEL AMAÇLI SIVI VE GAZLAR İÇİN (YANGI GAZLAR VE İÇME SUYU İÇİN OLANLAR HARİÇ)
-DÖZ,İÇ VİDALI TAM GEÇİŞLI GRİ (LAMEL GRAFİTLİ) DÖKME DEMİR, PN 10-PN 16, DN 15-DN 50(FÖY 1)
-DÖZ,İÇ VİDALI TAM GEÇİŞLI KÜRESEL GRAFİTLİ DÖKME DEMİR, PN 10-PN 40, DN 15-DN 50 (FÖY 1)
-DÖZ,FLANŞ BAĞLANTILI TAM GEÇİŞLI GRİ (LAMEL GRAFİTLİ) DÖKME DEMİR, PN 10-PN 16, DN 15-DN 300 (FÖY 2)
-DÖZ,İÇ VİDALI DAR GEÇİŞLI GRİ (LAMEL GRAFİTLİ) DÖKME DEMİR, PN 10-PN 16, DN 15-DN 50(FÖY 3)
-DÖZ,FLANŞ BAĞLANTILI DAR GEÇİŞLI GRİ (LAMEL GRAFİTLİ) DÖKME DEMİR, PN 10-PN 16, DN 15-DN 300 (FÖY 4

02.11.2022
Belgelendirme Merkezi Başkanı Adına
MERİÇ KARACAN
TSE İSTANBUL BELGELENDİRME MÜDÜRÜ

TÜRK STANDARDLARI ENSTİTÜSÜ
TÜRK STANDARDLARINA UYGUNLUK BELGESİ
TURKISH STANDARDS INSTITUTION
CERTIFICATE OF CONFORMITY TO TURKISH STANDARDS

BELGE NUMARASI / REFERENCE NUMBER OF LICENCE	024289-TSE-02/04
BELGENİN İLK VERİLİŞ TARİHİ / DATE OF FIRST ISSUE OF LICENCE	08.03.2011
BELGENİN SON GEÇERLİLİK TARİHİ / LICENCE VALID UNTIL	11.11.2023
BELGE SAHİBİ KURULUŞUN ADI / NAME OF THE LICENCE HOLDER	VIS VANA SANAYİ İTHALAT VE İHRACAT TİCARET LİMİTED ŞİRKETİ
BELGE SAHİBİ KURULUŞUN ADRESİ / ADRESS OF THE LICENCE HOLDER	SÜMERevLER BARKA SOK.NO:35 EYÜP İSTANBUL/TÜRKİYE
ÜRETİM YERİ ADI / NAME OF THE MANUFACTURING PLACE	VIS VANA SANAYİ İTHALAT VE İHRACAT TİCARET LİMİTED ŞİRKETİ
ÜRETİM YERİ ADRESİ / ADRESS OF THE MANUFACTURING PLACE	TÜRKOBA KÖYÜ NO:47 TEPECİK BÜYÜKÇEKMECE İSTANBUL / TÜRKİYE
İPTAL EDİLEN BELGE NUMARASI (Varsa) / INDICATION OF SUPERSEDED LICENCE (if any)	024289-TSE-02/03
TESCİLLİ TİCARİ MARKASI / REGISTERED TRADE MARK	ŞEKİL+VİSVANA SAN.İTHALAT İHRACAT TİC.LTD.ŞTİ.
İLGİLİ TÜRK STANDARDI / RELATED TURKISH STANDARD	TS EN 1171 / 09.12.2016
BELGE KAPSAMI / SCOPE OF LICENCE	

*ENDÜSTRİYEL VANALAR
-DÖKME DEMİR MALZEMEDEN(GG25-DIGG40),SÜRGÜLÜ,DN40(DAHİL)DEN DN1000(DAHİL)E KADAR ANMA ÇAPLI,PN6(DAHİL)DEN PN 25(DAHİL)E KADAR ANMA BASINÇLI,ÇOBARİK OLANLAR

02.11.2022
Belgelendirme Merkezi Başkanı Adına
MERİÇ KARACAN
TSE İSTANBUL BELGELENDİRME MÜDÜRÜ

VİSVANA

where the fluid flows...

www.visvana.com

Türkoba Mah. Atatürk 2 Cad.
No: 232/B-1 34537
Büyükçekmece
İstanbul / Türkiye

office : +90 (212) 859 00 71 - 72
mobile : +90 (533) 590 41 61
+90 (533) 705 89 11
e-mail : info@visvana.com
sales@visvana.com

KAV OFSET
Deniz KAVADAR
Mas/Sit Matbaacılar Sitesi 2. Cadde No: 152 Bağcılar / İstanbul
Tel: +90 (212) 628 93 63 Fax: +90 (212) 628 97 86
www.kavofset.com.tr

Printed date : 10.10.2023
Printed copies : 550

KOSGEB